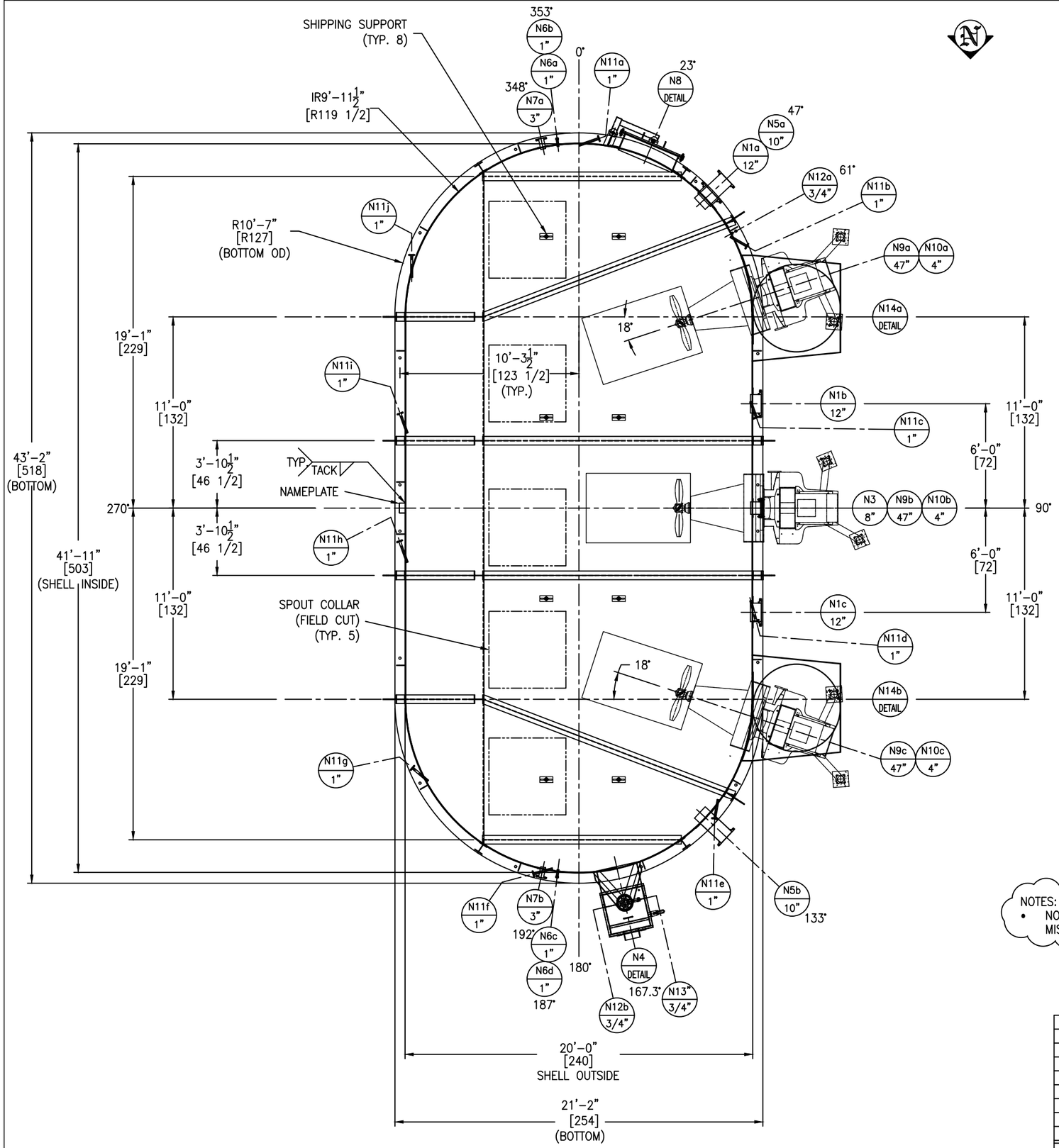

PLAN VIEW

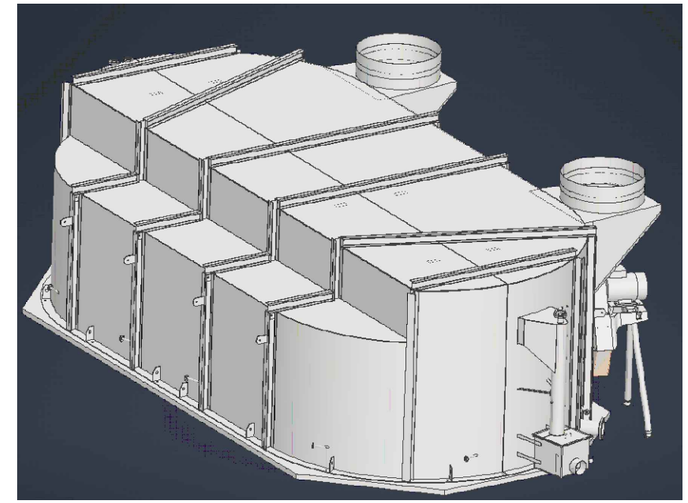

GENERAL NOTES:
- SEE SHEET#8 FOR N11a–j (SPARGER) NOZZLE LOCATIONS AND DETAILS.
- SEE SHEET#4 FOR STIFFENER LOCATIONS AND DETAILS.
- SEE SHEET#8 FOR ANCHOR HOLE AND GUSSET LOCATIONS AND DETAILS.
- SEE SHEET #13 FOR SHIPPING SUPPORT LOCATION AND DETAILS.

FABRICATION NOTES:
- DO NOT CUT HOLES FOR SPOUT COLLARS ON THE ROOF PLATE. ETCH MARK THE SAME.
- DO NOT CUT HOLES FOR STACK CONNECTION ON SHELL PLATE. ETCH MARK THE SAME.
- AGITATOR (N9a/b/c) & NOZZLES N10a/b/c WILL BE PROVIDED BY OTHERS INSTALLED BY SAVANNAH TANK.
- 10% RADIOGRAPHY ON SHELL PLATES.
- VACUUM BOX TESTING WILL BE DONE ON ROOF AND BOTTOM PLATES.
- DYE PEN OF ALL NOZZLES FROM OUTSIDE.

SHIPPED LOOSE:
(2 PC) TANK SPLIT INTO TWO PIECES.
(2 PC) STACK CONNECTION (N14a & N14b)
(1PC) OVERFLOW WITH LOWER BOX (N4)
(6 PC) ROOF LEVEL 2 STIFFENERS
(2) 193 3/16" LONG
(2) 186 5/8" LONG
(2) 137 5/32" LONG
(4 PC) 3/16" X 6" X 12' (SS304) BACKING STRIP

NOTES:
- NOZZLE N15a & N15b LOCATIONS MISSING, CUSTOMER TO PROVIDE.

REV	D.BY	C.BY	DATE	DESCRIPTION
2				AS BUILT
1				CERTIFIED
0	RS	AD	9/15/25	APPROVAL

REVISIONS

Savannah Tank & Equipment Corp.
1517 Telfair Road, Savannah, GA 31415
(912) 233-8902

DRAWN BY: RS
CHK'D BY: AD
APPROVED BY: NP
SCALE: 1/4" = 1'-0"

VALMET
DISSOLVING TANK
EQUIP. #
CUST. PO #S30019941

DRAWING NO.: 089-25-1 SHT 1 OF 13 REV. SET 0

MATERIALS OF CONSTRUCTION

	VESSEL
SHELL	SA240-AL2205
ROOF / BOTTOM	SA240-AL2205
OVERFLOW BOX ASSEMBLY	SS304/304L
NOZZLE NECKS	SA790-AL2205 WLD
NOZZLE FLANGES	SA182F-AL2205
MANWAY NECKS	SA240-AL2205
MANWAY FLANGE / COVER	SA36 & SA240-AL2205
ANCHOR GUSSET	SA240-304/304L
BOLTS/STUDS	SA193-B8
NUTS	SA194-8
REPADS	SA240-304/304L
COUPLINGS	SA182F-AL2205
SHIPPING SUPPORTS	SA53B-ERW & SA240-304/304L
LIFTING LUGS	SA36
STACK CONNECTION	SA240-AL2205
INSULATION RINGS	-
GROUND LUG	SA240-304/304L
ROOF/SHELL STIFFENERS	SA36

DESIGN DATA

	VESSEL
DESIGN AND FAB. CODE	API 650
CERT. STAMP REQ'D.	N/A
DESIGN PRESSURE	-
DESIGN TEMPERATURE	-
MIN. DESIGN METAL TEMP.	-
OPERATING PRESSURE	-
OPERATING TEMPERATURE	190° F
JOINT EFFICIENCY HEADS	0.70
JOINT EFFICIENCY SHELL	0.70
CORROSION ALLOWANCE	-
SPECIFIC GRAVITY	-
EARTHQUAKE ZONE	Ss = (-) S1 = (-)
WIND LOAD	-
STRESS RELIEF	NOT REQ'D
RADIOGRAPHIC EXAM	(10% OF SEAMS) SEE NOTE 7
DYE PENETRANT EXAM	(ALL NOZZLES) SEE NOTE 8
VACUUM BOX	(ROOF&BOTTOM SEAMS) SEE NOTE 9
HYDROSTATIC TEST	-

VESSEL FINISH

INTERIOR WELD TREATMENT:	SAV TANK STANDARD
EXTERIOR WELD TREATMENT:	SAV TANK STANDARD
SAV TANK FINISHING STANDARD:	SEE NOTE 6
INSULATION:	N/A
PAINTING:	SEE NOTE 10

VESSEL CAPACITY AND WEIGHTS

OPERATING CAPACITY	44,600 GAL. (@8' LIQUOR LEVEL)
FULL CAPACITY	62,000 GAL.
EMPTY SHIPPING WEIGHT	93,850 LBS.
WEIGHT FULL OF WATER	612,100 LBS
WEIGHT FULL OF PRODUCT	612,100 LBS

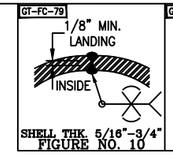

FIGURE NO. 10

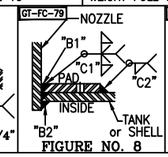

FIGURE NO. 8

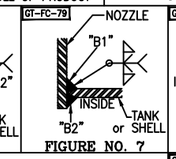

FIGURE NO. 7

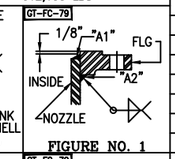

FIGURE NO. 1

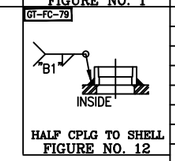

HALF CPLG TO SHELL
FIGURE NO. 12

NOZZLE SCHEDULE

MARK	SERVICE	SIZE	RATING	TYPE / STYLE	NECK SCHED.	PROJECTION EXT. (E)	PROJECTION INT. (MIN.)	WELD FIGURE	REPAD SIZE (WIDTH X THK.)	WELD SIZE "A1"	"A2"	"B1"	"B2"	"C1"	"C2"
N1a	PUMP SUCTION CONN.	12"	150#	RFSO	40S	6"	1"	1,8	4 1/2" X 1/4"	1/4	1/4	1/4	1/4	1/4	1/4
N1b	PUMP SUCTION CONN.	12"	150#	RFSO	40S	6"	1"	1,8	4 1/2" X 1/4"	1/4	1/4	1/4	1/4	1/4	1/4
N1c	PUMP SUCTION CONN.	12"	150#	RFSO	40S	6"	1"	1,8	4 1/2" X 1/4"	1/4	1/4	1/4	1/4	1/4	1/4
N3	MAKE UP CONN.	8"	150#	RFSO W/ BLIND	40S	6"	1"	1,8	2 1/8" X 1/4"	1/4	1/4	1/4	1/4	1/4	1/4
N4	OVERFLOW CONN.	32X20"	-	-	1/4"	SEE DWG	-	SEE DWG	-	SEE DETAIL ON SHEET#					
N5a	FLOOR DRAIN	10"	150#	RFSO	40S	19 3/4"	5"	1,8	4 1/2" X 1/4"	1/4	1/4	1/4	1/4	1/4	1/4
N5b	FLOOR DRAIN	10"	150#	RFSO	40S	19 3/4"	5"	1,8	4 1/2" X 1/4"	1/4	1/4	1/4	1/4	1/4	1/4
N6a	DENSITY CONN.	1"	-	TOE PIPE	40S	4 3/16"	1"	7	-	-	-	1/8	1/8	-	-
N6b	DENSITY CONN.	1"	-	TOE PIPE	40S	4 3/16"	1"	7	-	-	-	1/8	1/8	-	-
N6c	DENSITY CONN.	1"	-	TOE PIPE	40S	4 3/16"	1"	7	-	-	-	1/8	1/8	-	-
N6d	DENSITY CONN.	1"	-	TOE PIPE	40S	4 3/16"	1"	7	-	-	-	1/8	1/8	-	-
N7a	LEVEL TRANSMITTER	3"	150#	RFSO	40S	6"	1"	1,8	2" X 1/4"	3/16	3/16	3/16	3/16	1/4	1/4
N7b	LEVEL TRANSMITTER	3"	150#	RFSO	40S	6"	1"	1,8	2" X 1/4"	3/16	3/16	3/16	3/16	1/4	1/4
N8	CLEAN OUT DOOR	40x72"	-	-	-	10"	1"	8	6 1/4" X 1/2"	-	-	5/16	5/16	1/2	1/2
N9a	AGITATOR-1	47"	***** BY OTHERS *****			SEE DWG	1"	8	7 1/2" X 1/2"	-	-	5/16	5/16	1/2	1/2
N9b	AGITATOR-2	47"	***** BY OTHERS *****			SEE DWG	1"	8	7 1/2" X 1/2"	-	-	5/16	5/16	1/2	1/2
N9c	AGITATOR-3	47"	***** BY OTHERS *****			SEE DWG	1"	8	7 1/2" X 1/2"	-	-	5/16	5/16	1/2	1/2
N10a	AGITATOR-1 WEAK WASH	***** BY OTHERS (PART OF AGITATOR ASSEMBLY)*****													
N10b	AGITATOR-1 WEAK WASH	***** BY OTHERS (PART OF AGITATOR ASSEMBLY)*****													
N10c	AGITATOR-1 WEAK WASH	***** BY OTHERS (PART OF AGITATOR ASSEMBLY)*****													
N11(a-j)	SPARGER NOZZLE	1"	150#	RFSO (10 REQ'D)	40S	SEE DWG	1 1/8"	1,7	-	1/8	1/8	1/8	1/8	-	-
N12a	TEMPERATURE CONN.	3/4"	3000#	HALF THRD CPLG	-	-	-	12	-	-	-	1/8	-	-	-
N12b	TEMPERATURE CONN.	3/4"	3000#	HALF THRD CPLG	-	-	-	12	-	-	-	1/8	-	-	-
N13	CONDUCTIVITY	3/4"	3000#	HALF THRD CPLG	-	-	-	12	-	-	-	1/8	-	-	-
N14a	STACK (CUT IN FIELD)	6'-1 1/2" X 4'-11 1/8" (SHOP FAB.)			1/2"	SEE DWG	-	SEE DWG	-	SEE DETAIL ON SHEET#					
N14b	STACK (CUT IN FIELD)	6'-1 1/2" X 4'-11 1/8" (SHOP FAB.)			1/2"	SEE DWG	-	SEE DWG	-	SEE DETAIL ON SHEET#					
N15a	LEVEL DETECTOR	3"	150#	RFSO	40S	TBD	1"	1,8	2" X 1/4"	3/16	3/16	3/16	3/16	1/4	1/4
N15b	LEVEL DETECTOR	3"	150#	RFSO	40S	TBD	1"	1,8	2" X 1/4"	3/16	3/16	3/16	3/16	1/4	1/4

NOTE:7
X-RAY: 10% OF ALL SHELL WELDS.
SPOT X-RAY FOR NOZZLE N1a/b/c, N6a/c & N8 PER CODE.
NOTE:8
NOTE: DYE PEN - ALL NOZZLES FROM OUTSIDE @ PIPE TO SHELL WELD JOINT.
NOTE:9
ALL ROOF & FLAT BOTTOM JOINTS TO BE VACUUM BOX TESTED.
NOTE:10
PAINTING - (ALL CARBON STEEL SUPPORTS, MANWAY FLANGE&COVER)
SANDBLAST SP6. (1) COAT MACROPOXY 646 (3-4 MILS) HASE GRAY PAINT.

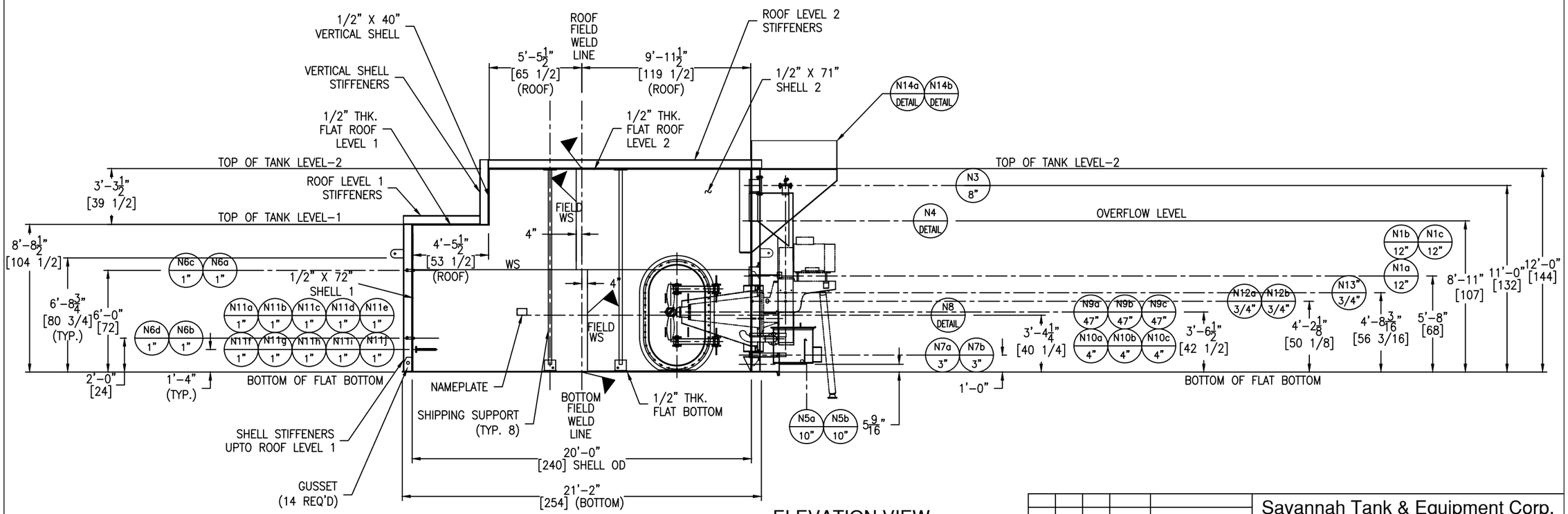

ELEVATION VIEW

This drawing is issued for customer approval. please review, make approval changes (if any) in red. check the appropriate box, sign & date.

- ☐ Approval - no changes. Please proceed with fabrication.
- ☐ Approved as noted. Please proceed with fabrication
- ☐ Not approved. Please make changes and resubmit.

Customer signature _____ Date _____

GENERAL NOTES

1.) COVER ALL FLANGES, OPENINGS & MACHINED SURFACES PRIOR TO SHIPMENT UNLESS OTHERWISE NOTED.
2.) BOLT HOLES TO STRADDLE 0° & 180° UNLESS OTHERWISE NOTED.
3.) 1 (ONE) 1/4" TAPPED HOLE REQUIRE IN REINFORCING PLATE.
4.) ASME MATERIALS TO CONFORM TO THE FOLLOWING: FLANGES - B16.5, FITTINGS - B16.9 & COUPLINGS - B16.11.
6.) PICKLE ALL EXTERIOR WELDS. PASSIVATE INTERIOR & EXTERIOR OF VESSEL.
7.) X-RAY: 10% OF ALL ALL SHELL WELDS.
SPOT X-RAY FOR NOZZLE N1a/b/c, N6a/c & N8 PER CODE.
8.) DYE PEN - ALL NOZZLES FROM OUTSIDE @ PIPE TO SHELL WELD JOINT.
9.) ALL ROOF & FLAT BOTTOM JOINTS TO BE VACUUM BOX TESTED.
10.) PAINTING - (ALL CARBON STEEL SUPPORTS, MANWAY FLANGE & COVER)
SANDBLAST SP6. (1) COAT MACROPOXY 646 (3-4 MILS) HASE GRAY PAINT.

REV	D.BY	C.BY	DATE	DESCRIPTION
2				AS BUILT
1				CERTIFIED
0	RS	AD	9/15/25	APPROVAL

1 REVISIONS

Savannah Tank & Equipment Corp.
1517 Telfair Road, Savannah, GA 31415
(912) 233-8902

DRAWN BY: RS
CHK'D BY: AD
APPROVED BY: NP
SCALE: 1/4" = 1'-0"

VALMET
DISSOLVING TANK
EQUIP. #
CUST. PO #S30019941

DRAWING NO.: 089-25-2 SHT 2 OF 13 REV. SET 0

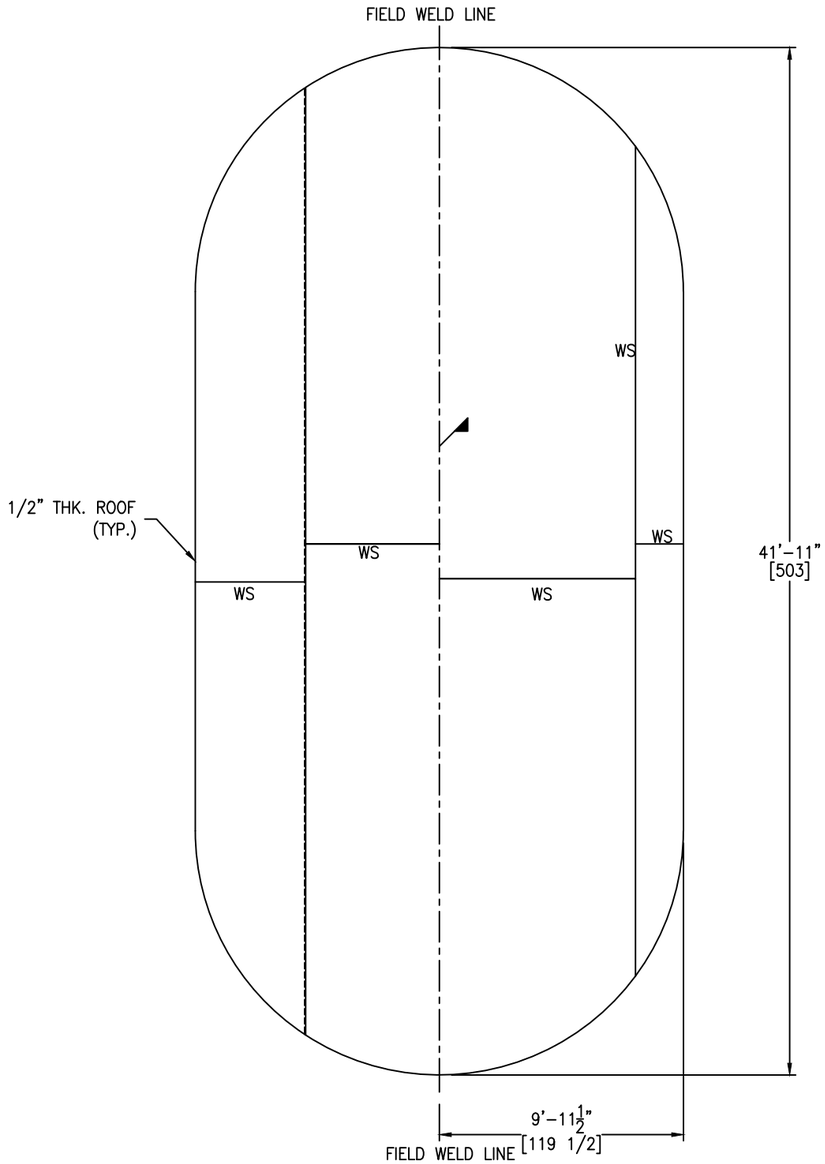

ROOF LAYOUT DETAIL

SCALE: 1/4" = 1'-0"

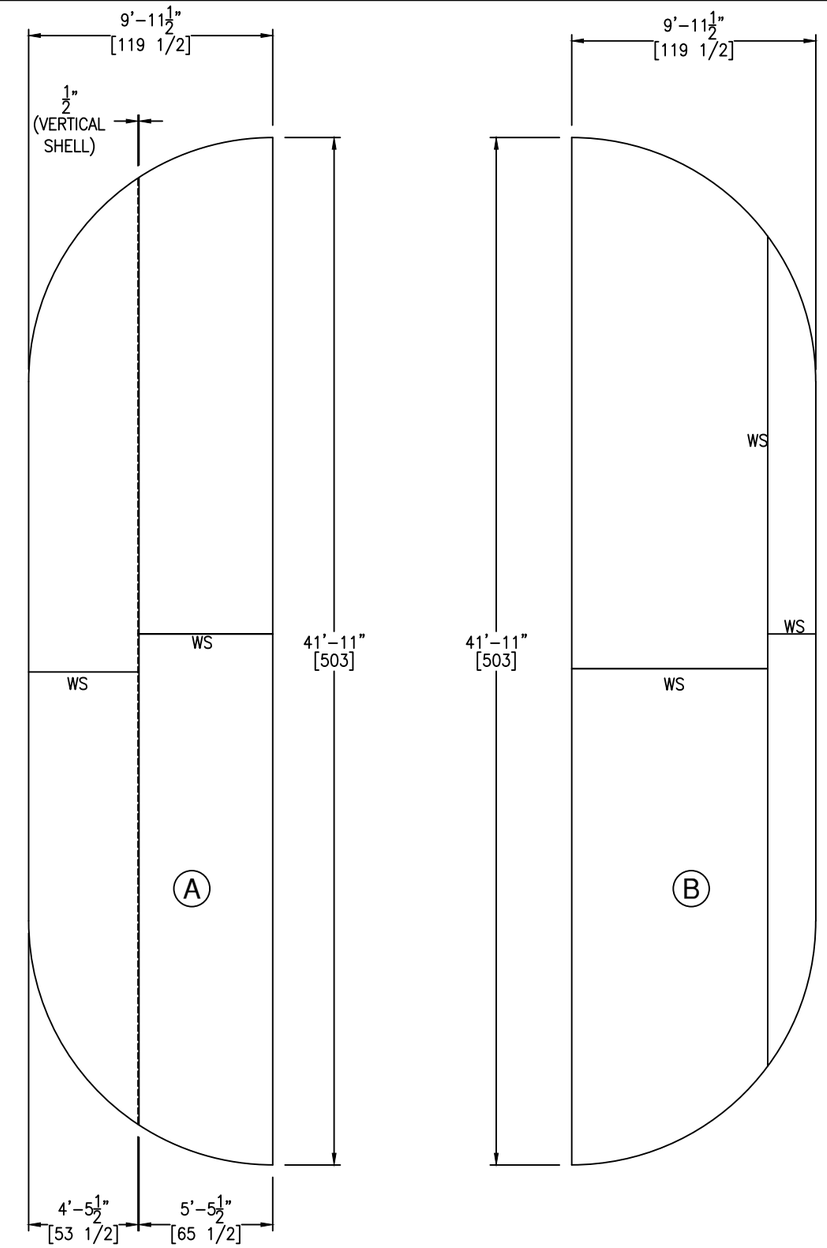

ROOF SHIPPING LAYOUT DETAIL

SCALE: 1/4" = 1'-0"

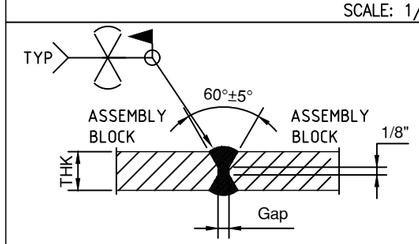

DETAIL FOR ROOF PLATE FIELD WELD

GT-FC-79

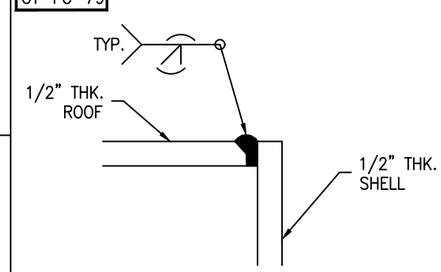

ROOF DETAIL

SCALE: 6" = 1'-0"

REV	D.BY	C.BY	DATE	DESCRIPTION
2				AS BUILT
1				CERTIFIED
0	RS	AD	9/15/25	APPROVAL

⚠ REVISIONS

Savannah Tank & Equipment Corp.
1517 Telfair Road, Savannah, GA 31415
(912) 233-8902

DRAWN BY: RS
CHK'D BY: AD
APPROVED BY: NP
SCALE: 1/4" = 1'-0"

VALMET
DISSOLVING TANK
EQUIP. #
CUST. PO #S30019941

DRAWING NO.: 089-25-3 SHT 3 OF 13 | REV. SET 0

NOTE: STIFFENERS ON ROOF LEVEL 2 ARE SHIPPED LOOSE

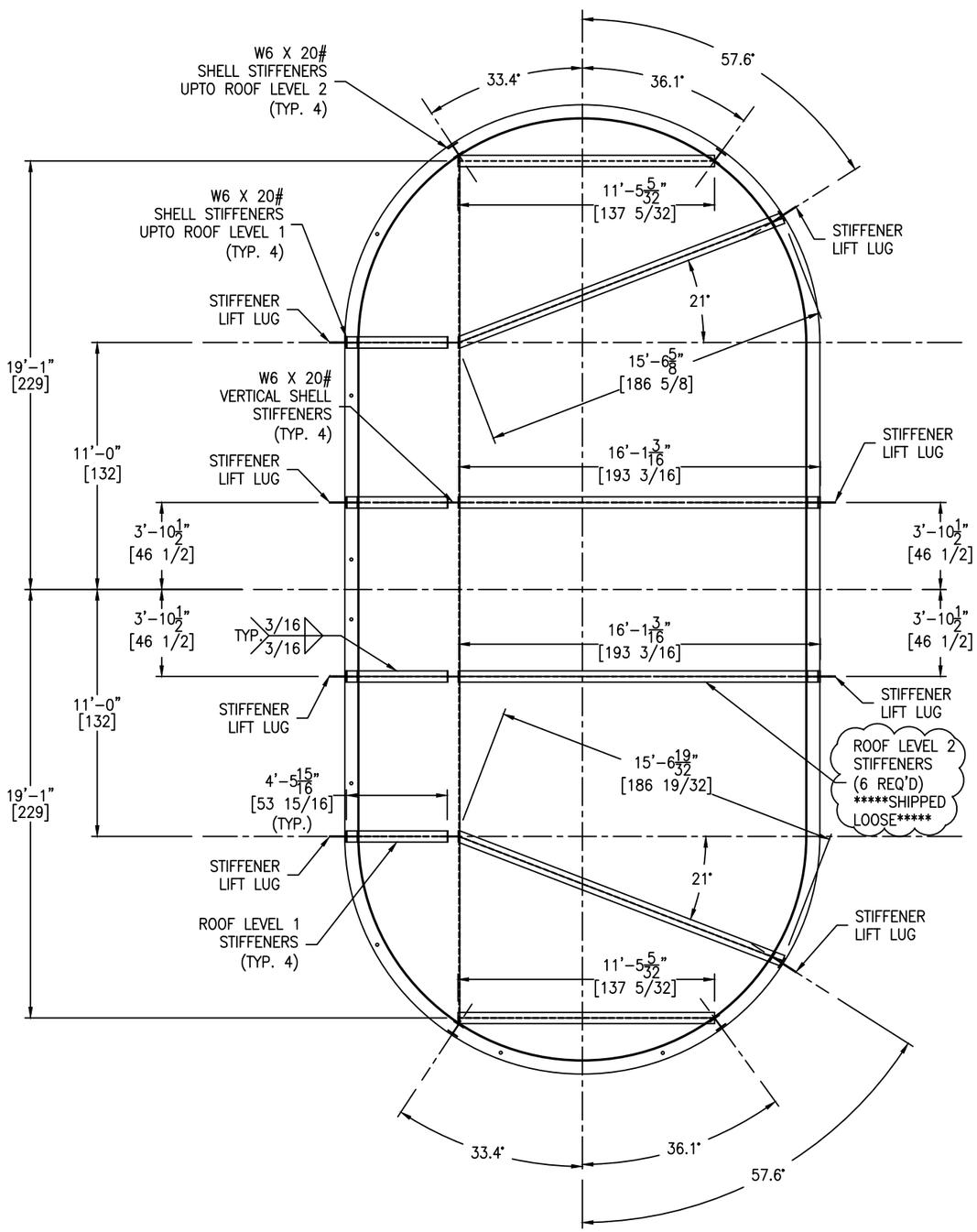

STIFFENER PLAN VIEW DETAIL

SCALE: 1/4" = 1'-0"

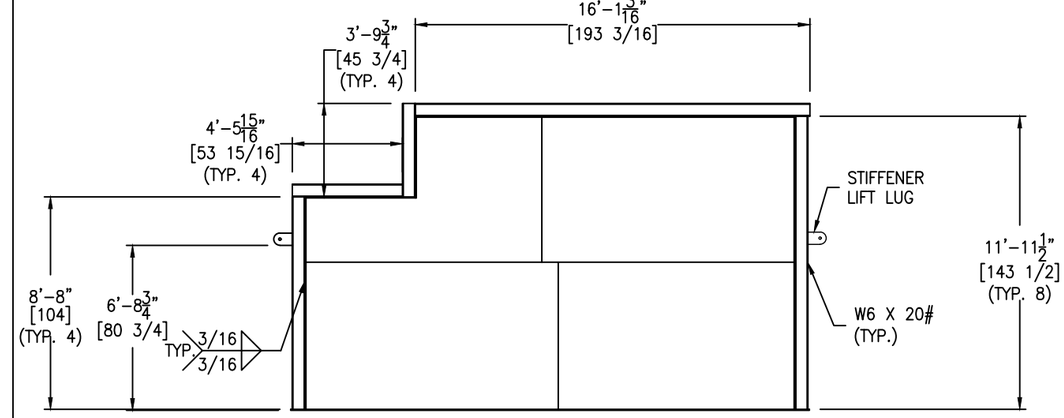

STIFFENER ELEVEATION VIEW DETAIL

SCALE: 1/4" = 1'-0"

FC-38

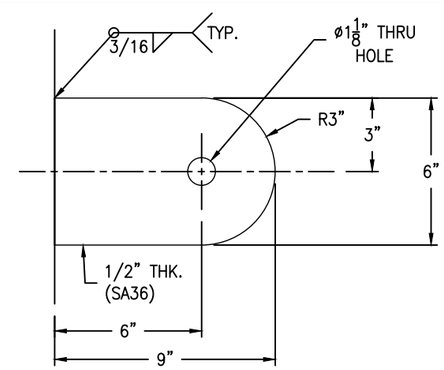

STIFFENER LIFT LUG DETAIL

(8 REQ'D) SCALE: 3" = 1'-0"

REV	D.BY	C.BY	DATE	DESCRIPTION
2				AS BUILT
1				CERTIFIED
0	RS	AD	9/15/25	APPROVAL

REVISIONS

Savannah Tank & Equipment Corp.
1517 Telfair Road, Savannah, GA 31415
(912) 233-8902

DRAWN BY: RS
CHK'D BY: AD
APPROVED BY: NP
SCALE: 1/4" = 1'-0"

VALMET
DISSOLVING TANK
EQUIP. #
CUST. PO #S30019941

DRAWING NO.: 089-25-4 SHT 4 OF 13 REV. SET 0

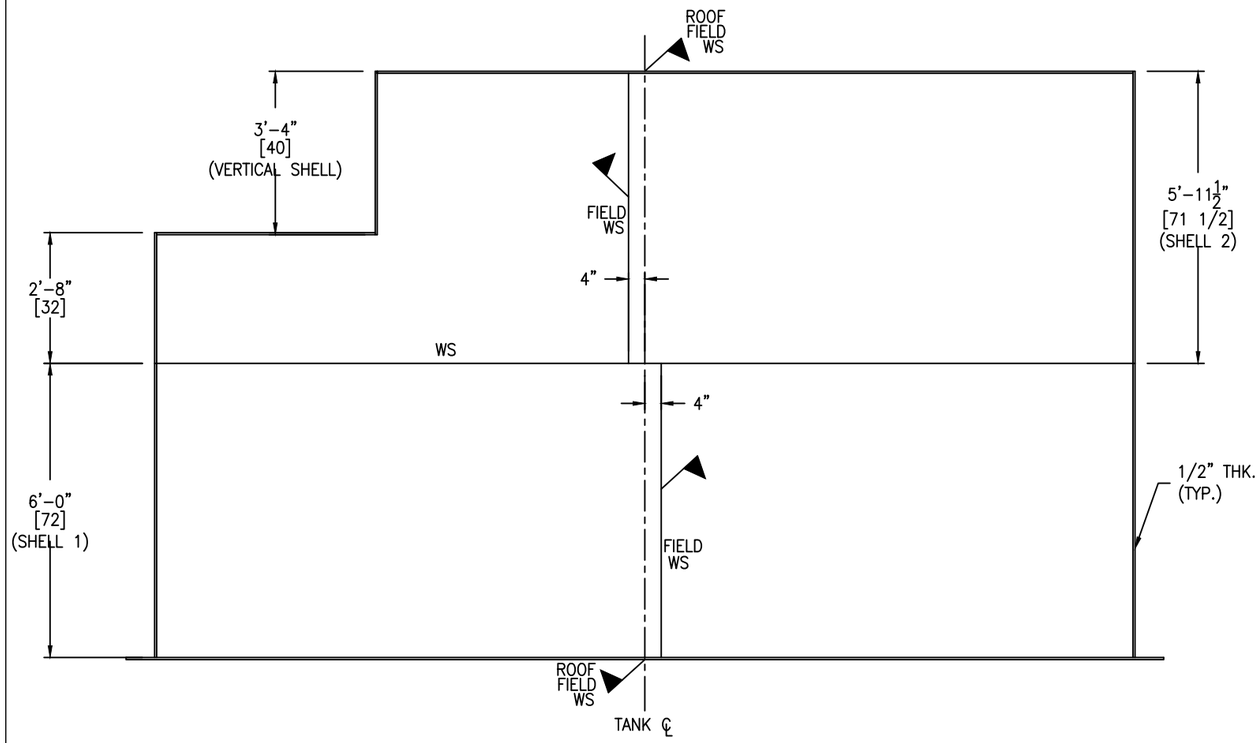

SHELL ELEVATION DETAIL

SCALE: 1/2" = 1'-0"

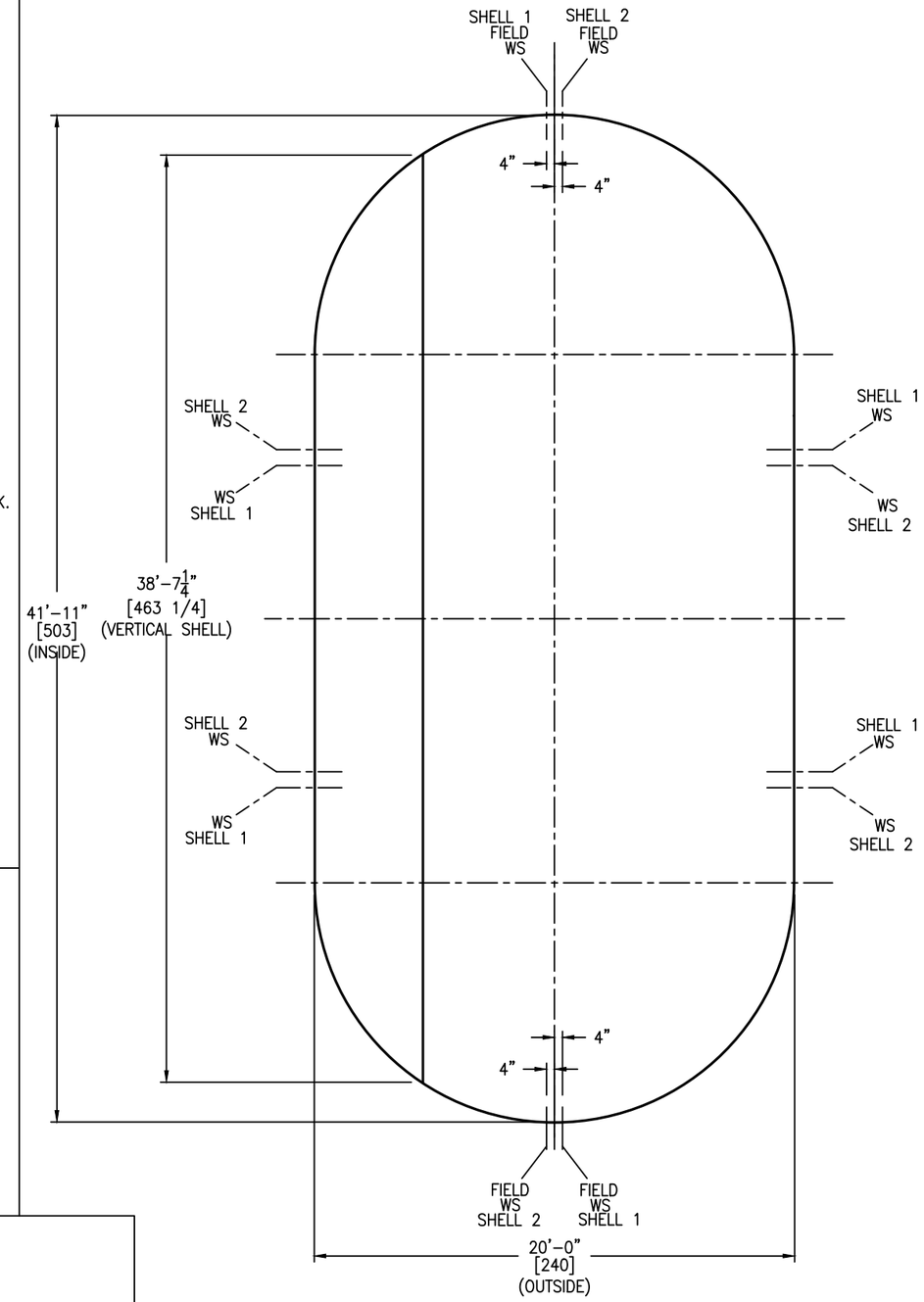

SHELL PLAN DETAIL

SCALE: 1/4" = 1'-0"

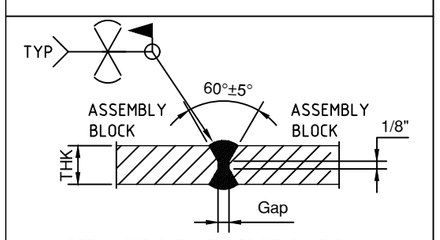

DETAIL FOR SHELL PLATE FIELD WELD

GT-FC-79

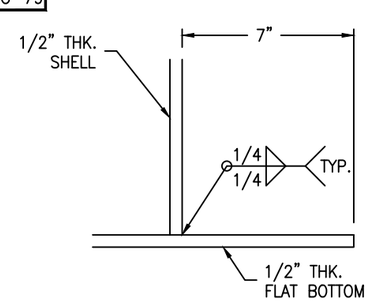

SHELL TO BOTTOM WELD DETAIL

SCALE: 3" = 1'-0"

GT-FC-79

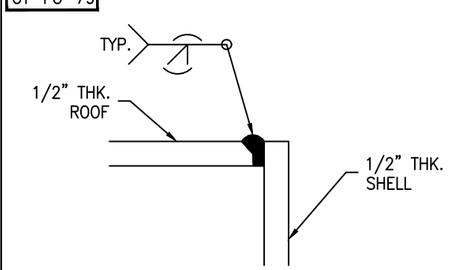

SHELL DETAIL

SCALE: 6" = 1'-0"

REV	D.BY	C.BY	DATE	DESCRIPTION
2				AS BUILT
1				CERTIFIED
0	RS	AD	9/15/25	APPROVAL

⚠ REVISIONS

Savannah Tank & Equipment Corp.
1517 Telfair Road, Savannah, GA 31415
(912) 233-8902

DRAWN BY: RS
CHK'D BY: AD
APPROVED BY: NP
SCALE: 1/4" = 1'-0"

VALMET
DISSOLVING TANK
EQUIP. #
CUST. PO #S30019941

DRAWING NO.: 089-25-5 SHT 5 OF 13 REV. SET 0

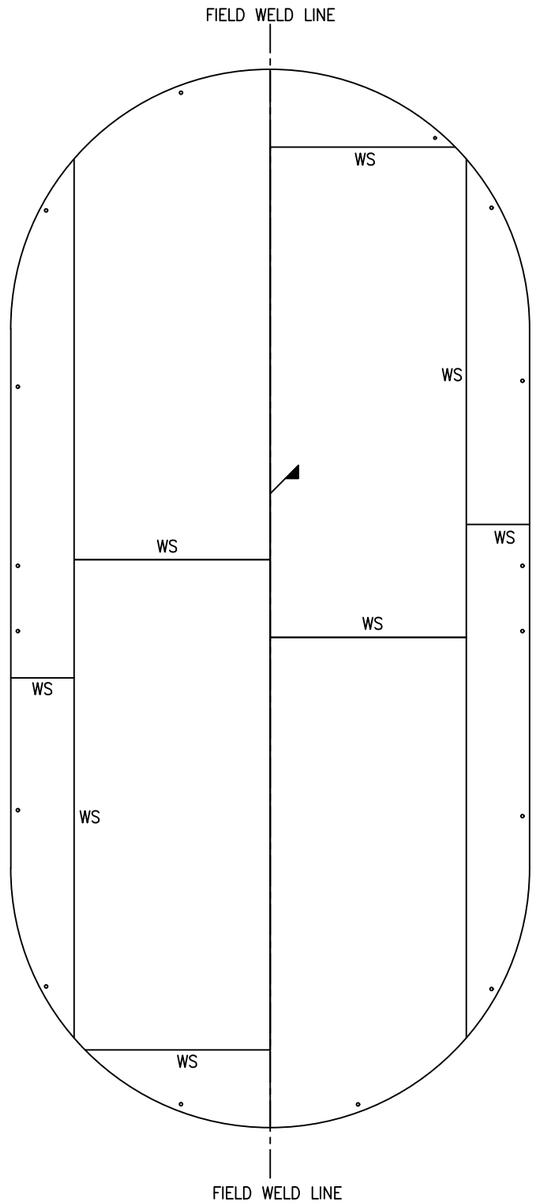

BOTTOM LAYOUT DETAIL

SCALE: 1/4" = 1'-0"

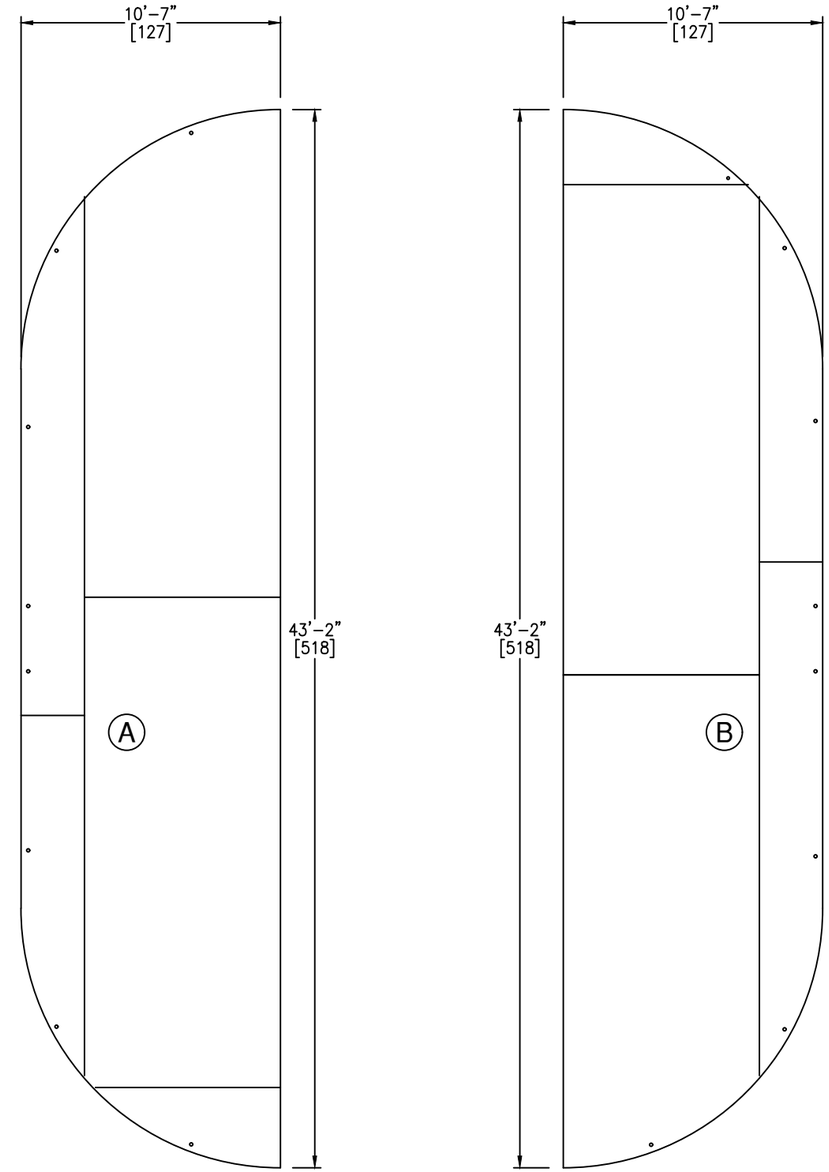

BOTTOM SHIPPING LAYOUT DETAIL

SCALE: 1/4" = 1'-0"

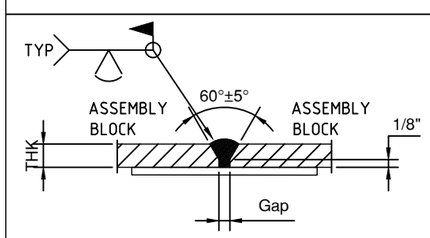

DETAIL FOR BOTTOM PLATE FIELD WELD

REV	D.BY	C.BY	DATE	DESCRIPTION
2				AS BUILT
1				CERTIFIED
0	RS	AD	9/15/25	APPROVAL

REVISIONS

Savannah Tank & Equipment Corp.
1517 Telfair Road, Savannah, GA 31415
(912) 233-8902

DRAWN BY: RS
CHK'D BY: AD
APPROVED BY: NP
SCALE: 1/4" = 1'-0"

VALMET
DISSOLVING TANK
EQUIP. #
CUST. PO #S30019941

DRAWING NO.: 089-25-6 SHT 6 OF 13 | REV. SET 0

GT-FC-79

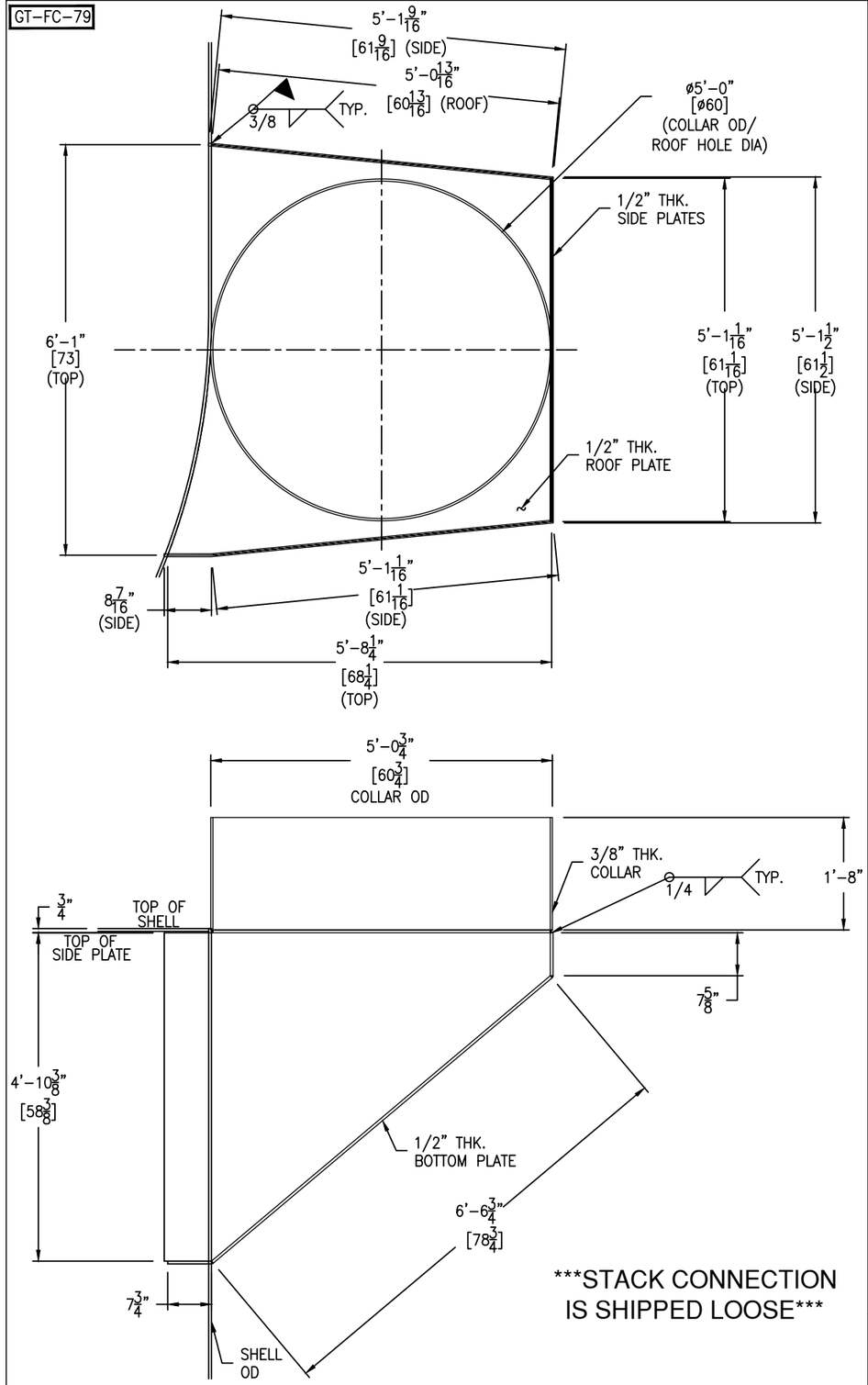

STACK CONNECTION IS SHIPPED LOOSE

NOTE: DO NOT CUT HOLE IN SHELL FOR STACK CONNECTION. LOCATION TO BE ETCHED IN PLACE. HOLE IS FIELD CUT.

STACK CONNECTION DETAIL

SCALE: 3/4" = 1'-0"

NOTE: COLLAR CONNECTION LOCATION TO BE ETCHED IN PLACE. HOLE IS FIELD CUT.

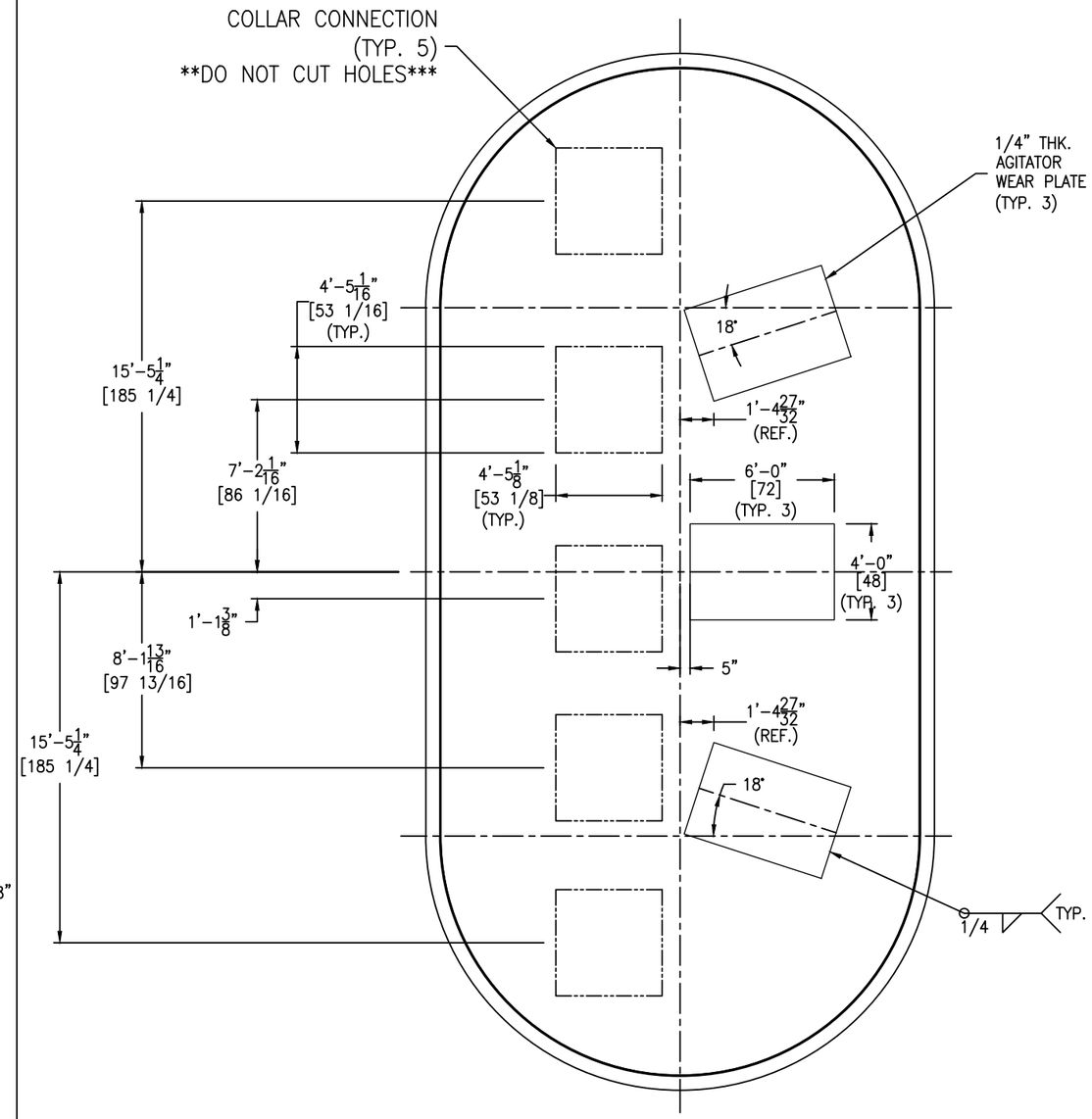

COLLAR OPENING AND AGITATOR WEAR PLATE LOCATION DETAIL

SCALE: 1/4" = 1'-0"

REV	D.BY	C.BY	DATE	DESCRIPTION
2				AS BUILT
1				CERTIFIED
0	RS	AD	9/15/25	APPROVAL

REVISIONS

Savannah Tank & Equipment Corp.
1517 Telfair Road, Savannah, GA 31415
(912) 233-8902

DRAWN BY: RS
CHK'D BY: AD
APPROVED BY: NP
SCALE: 1/4" = 1'-0"

VALMET
DISSOLVING TANK
EQUIP. #
CUST. PO #S30019941

DRAWING NO.: 089-25-7 SHT 7 OF 13 REV. SET 0

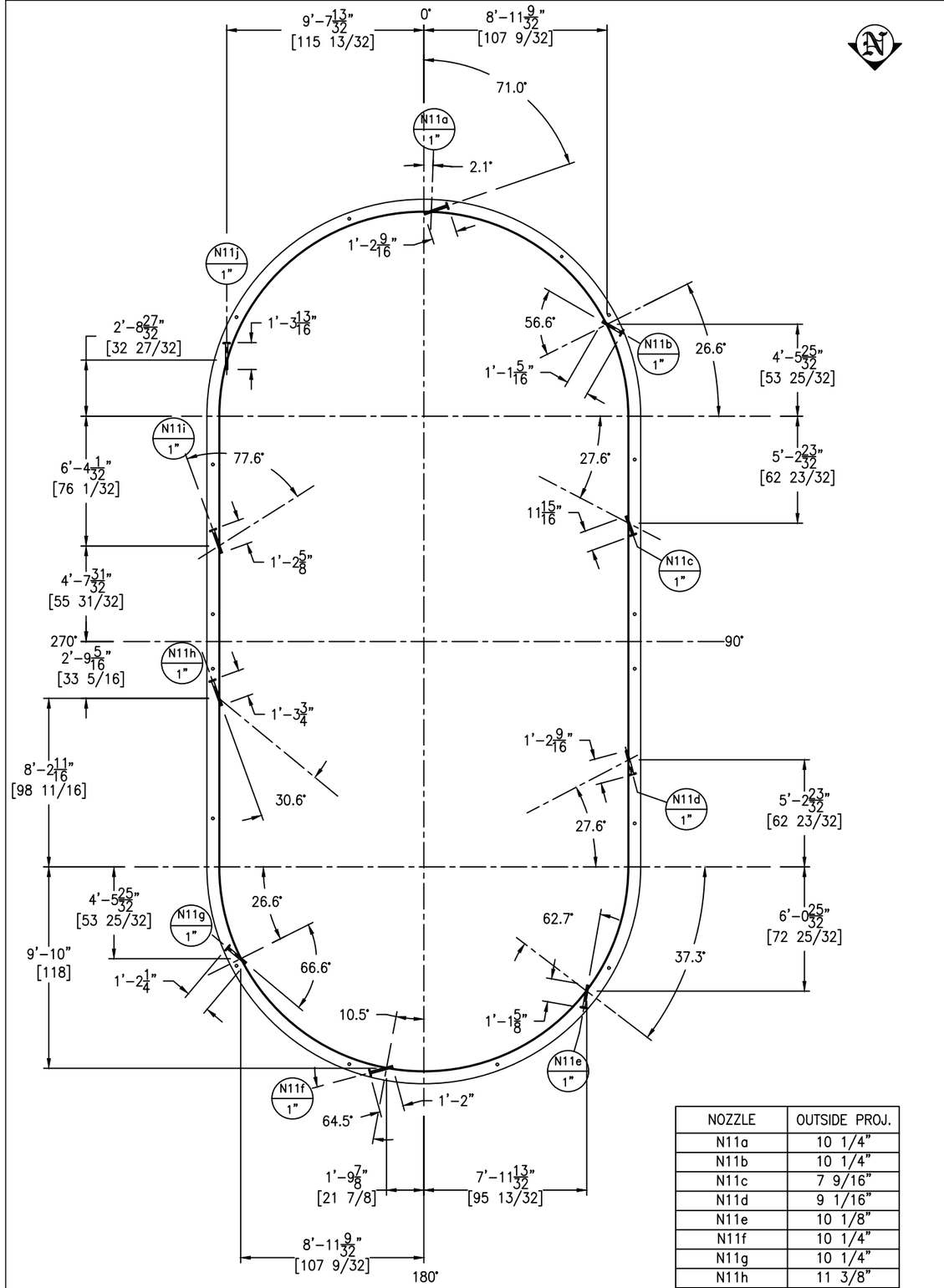

NOZZLE	OUTSIDE PROJ.
N11a	10 1/4"
N11b	10 1/4"
N11c	7 9/16"
N11d	9 1/16"
N11e	10 1/8"
N11f	10 1/4"
N11g	10 1/4"
N11h	11 3/8"
N11i	10 1/4"
N11j	10 1/4"

NOZZLE N11 LOCATION DETAIL

SCALE: 1/4" = 1'-0"

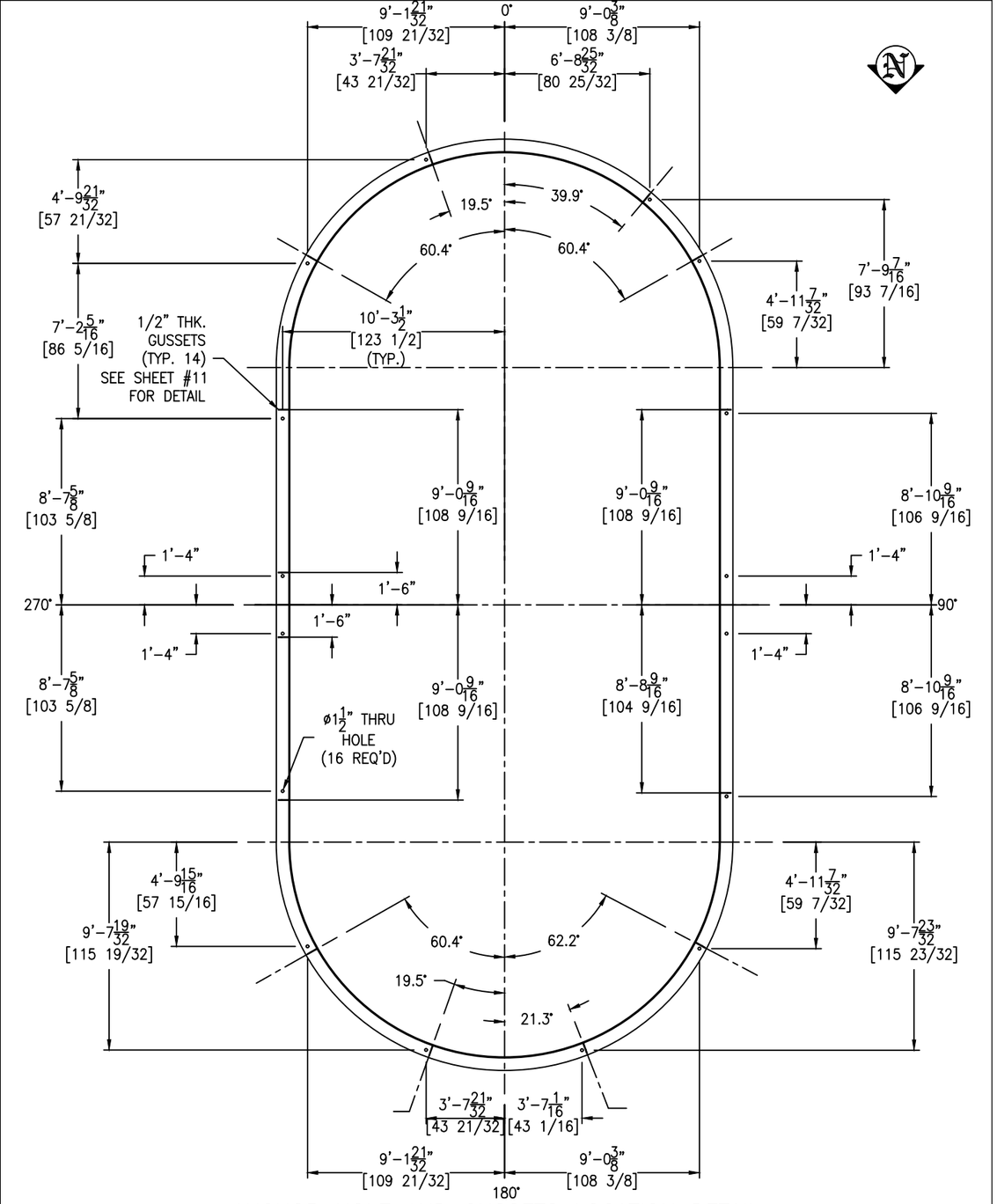

ANCHOR HOLE AND GUSSETS LOCATION DETAIL

SCALE: 1/4" = 1'-0"

REV	D.BY	C.BY	DATE	DESCRIPTION
2				AS BUILT
1				CERTIFIED
0	RS	AD	9/15/25	APPROVAL

⚠ REVISIONS

Savannah Tank & Equipment Corp.
1517 Telfair Road, Savannah, GA 31415
(912) 233-8902

DRAWN BY: RS
CHK'D BY: AD
APPROVED BY: NP
SCALE: 1/4" = 1'-0"

VALMET
DISSOLVING TANK
EQUIP. #
CUST. PO #S30019941

DRAWING NO.: 089-25-8 SHT 8 OF 13 | REV. SET 0

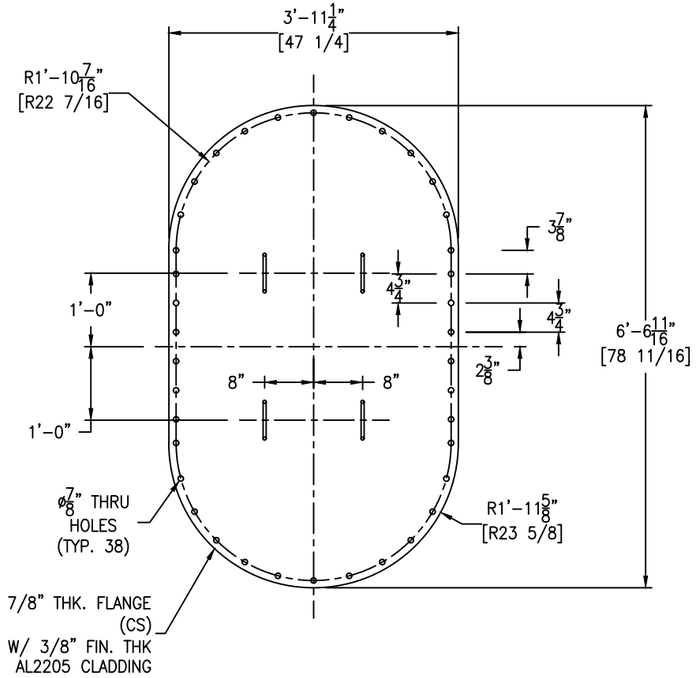

COVER DETAIL

SCALE: 3/4" = 1'-0"

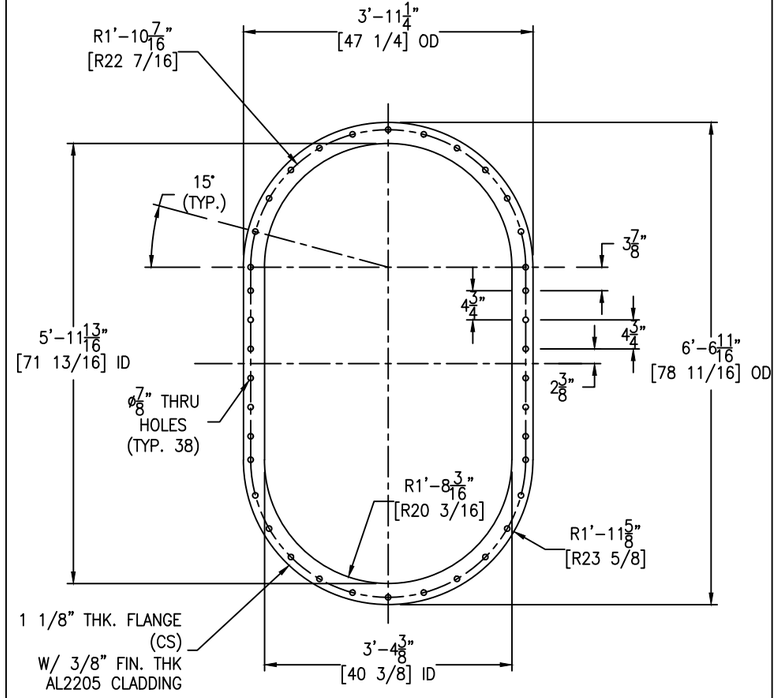

FLANGE DETAIL

SCALE: 3/4" = 1'-0"

FC-14 FC-38

GT-FC-81

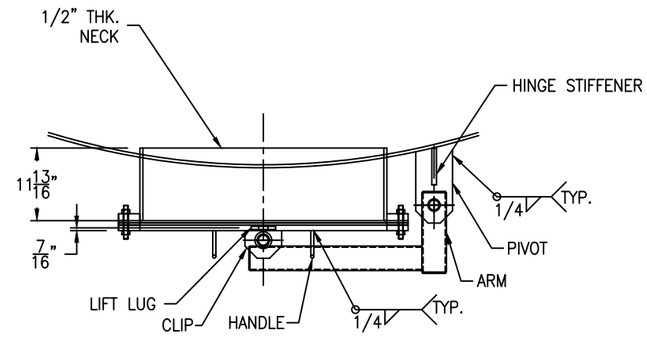

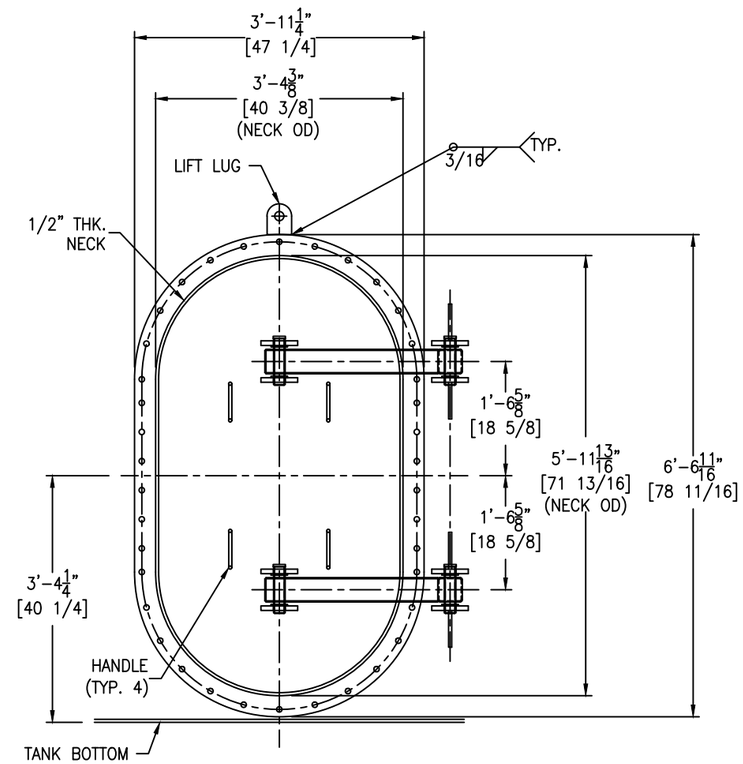

FLANGE DETAIL

SCALE: 3/4" = 1'-0"

FC-78

GT-FC-80

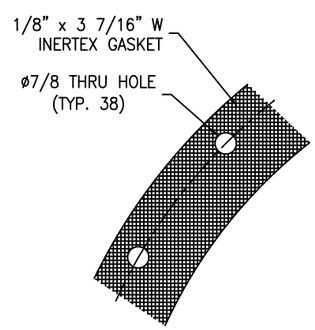

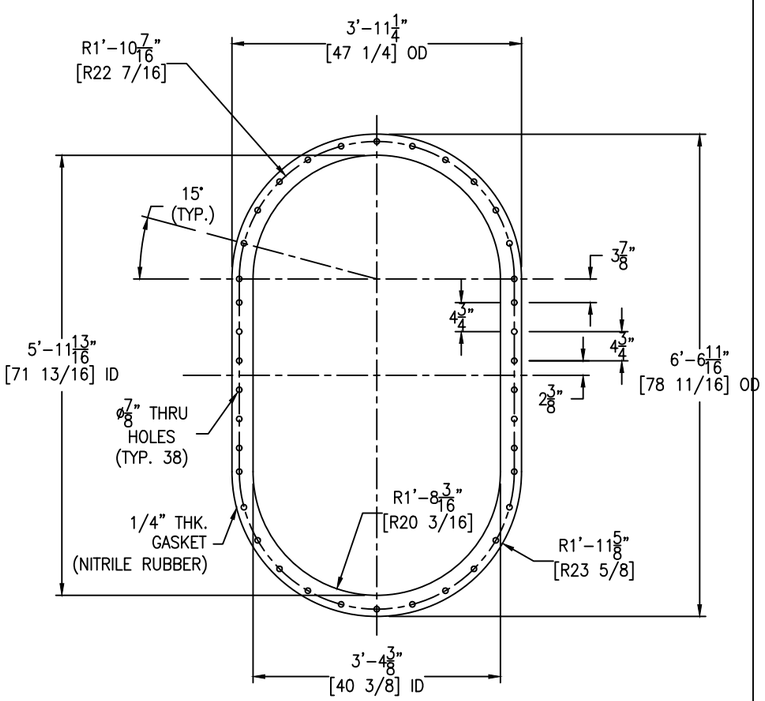

GASKET DETAIL

SCALE: 3/4" = 1'-0"

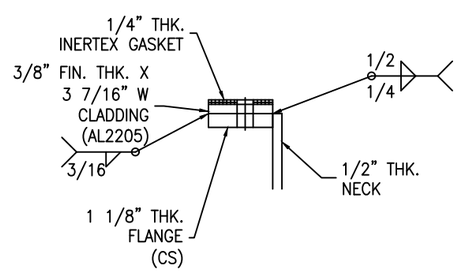

*** DRAWING NOT TO SCALE ***

BOLTING for MANWAY
(38+10) 3/4-10 NC x 5" FULL THRD STUDS
(76+20) 3/4-10 NC HH NUT
(76+20) 3/4" FLAT WASHER
(1) SEGMENTED GASKET 1/4" THK.

REV	D.BY	C.BY	DATE	DESCRIPTION
2				AS BUILT
1				CERTIFIED
0	RS	AD	9/15/25	APPROVAL

1 REVISIONS

Savannah Tank & Equipment Corp.
1517 Telfair Road, Savannah, GA 31415
(912) 233-8902

DRAWN BY: RS
CHK'D BY: AD
APPROVED BY: NP
SCALE: 3/4" = 1'-0"

VALMET
DISSOLVING TANK
EQUIP. #
CUST. PO #S30019941

DRAWING NO.: 089-25-9 SHT 9 OF 13 REV. SET 0

FC-14

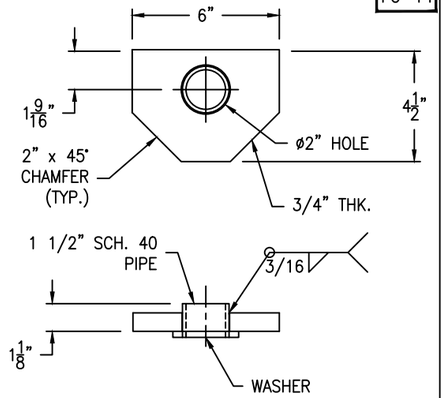

CLIP DETAIL

(4 REQ'D) SCALE: 3" = 1'-0"

FC-14

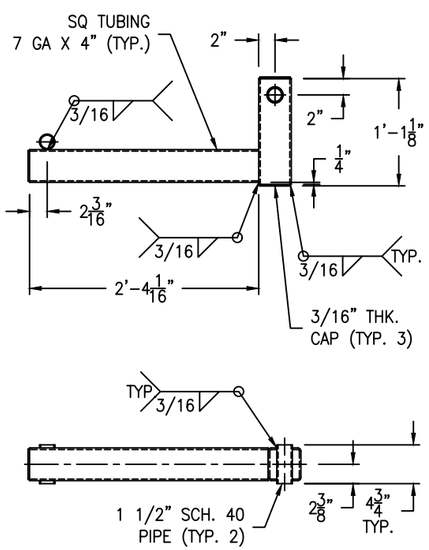

ARM DETAIL

(2 REQ'D) SCALE: 1" = 1'-0"

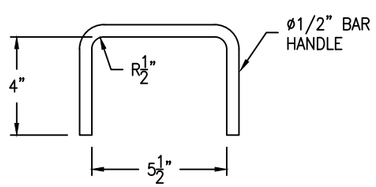

HANDLE DETAIL

SCALE: 3" = 1'-0"

FC-14

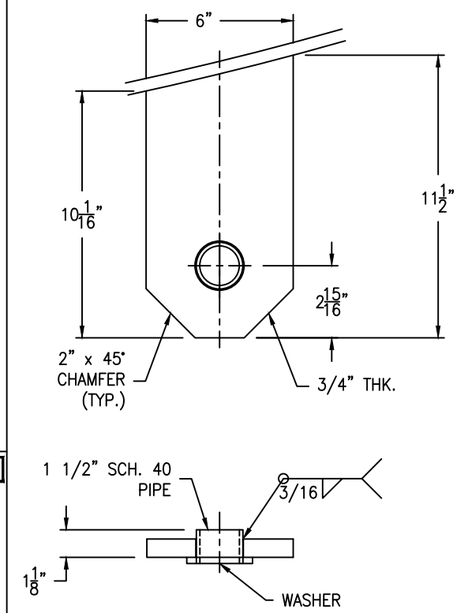

PIVOT DETAIL

(4 REQ'D) SCALE: 3" = 1'-0"

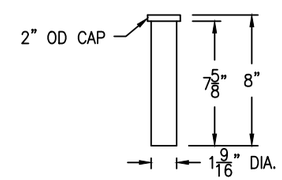

PIN DETAIL

(4 REQ'D) SCALE: 2" = 1'-0"

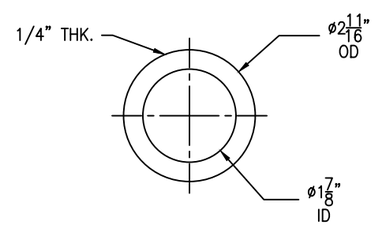

CLIP & PIVOT WASHER DETAIL

(12 REQ'D) SCALE: 6" = 1'-0"

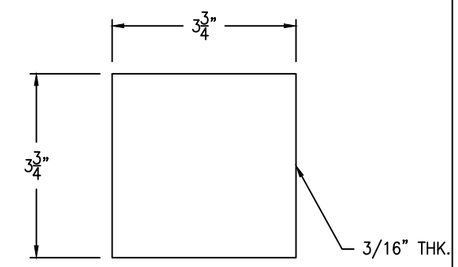

ARM CAP

(6 REQ'D) SCALE: 6" = 1'-0"

GT-FC-81

FC-14

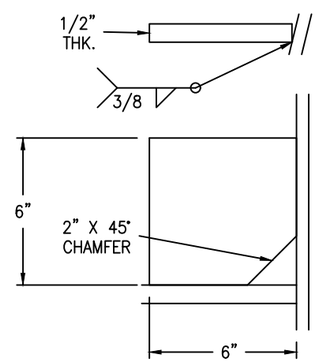

HINGE STIFFENER DETAIL

(4 REQ'D) SCALE: 3" = 1'-0"

FC-38

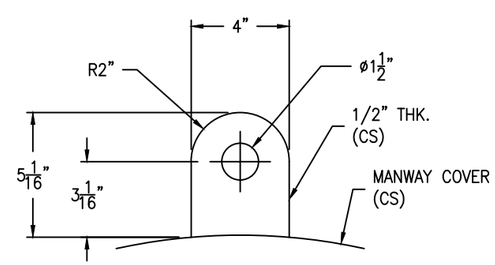

LIFT LUG DETAIL

(1 REQ'D) SCALE: 3" = 1'-0"

GT-FC-80

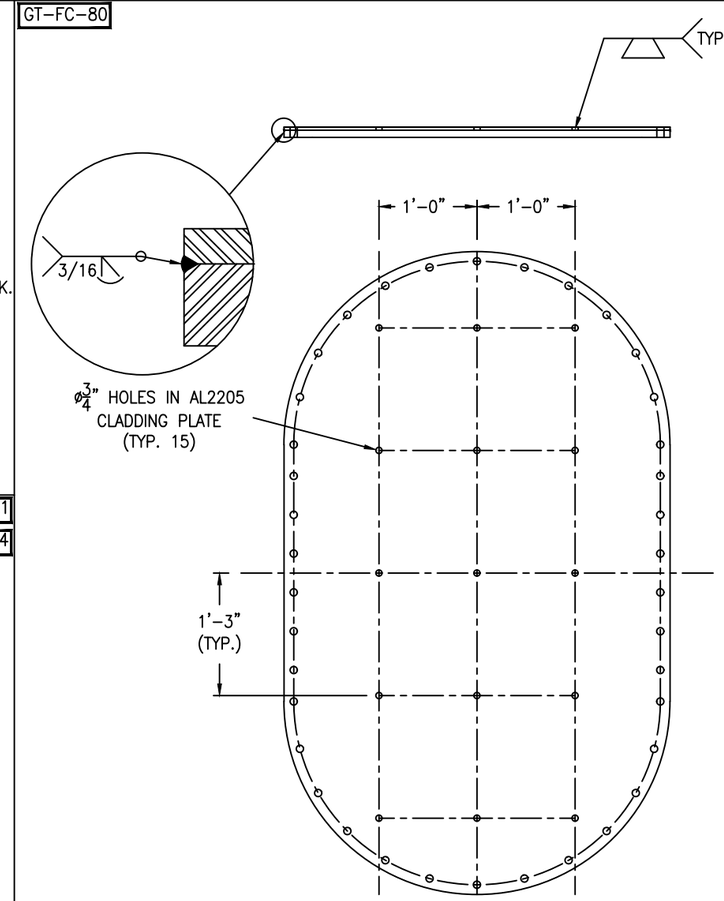

COVER WELDING DETAIL

SCALE: 3/4" = 1'-0"

GT-FC-80

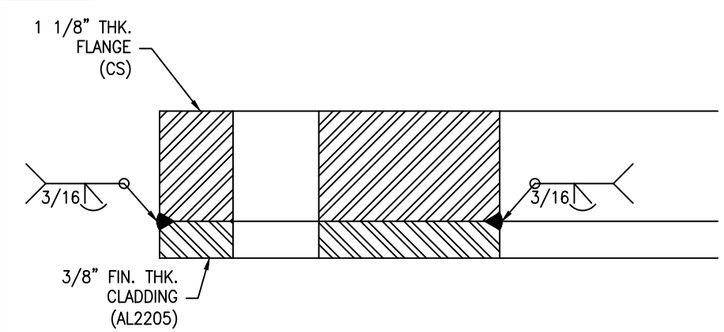

FLANGE WELDING DETAIL

SCALE: 3/4" = 1'-0"

REV	D.BY	C.BY	DATE	DESCRIPTION
2				AS BUILT
1				CERTIFIED
0	RS	AD	9/15/25	APPROVAL

⚠ REVISIONS

Savannah Tank & Equipment Corp.
1517 Telfair Road, Savannah, GA 31415
(912) 233-8902

DRAWN BY: RS
CHK'D BY: AD
APPROVED BY: NP
SCALE: 1" = 1'-0"

VALMET
DISSOLVING TANK
EQUIP. #
CUST. PO #S30019941

DRAWING NO.:089-25-10 SHT 10 OF 13 | REV. SET 0

FC-14

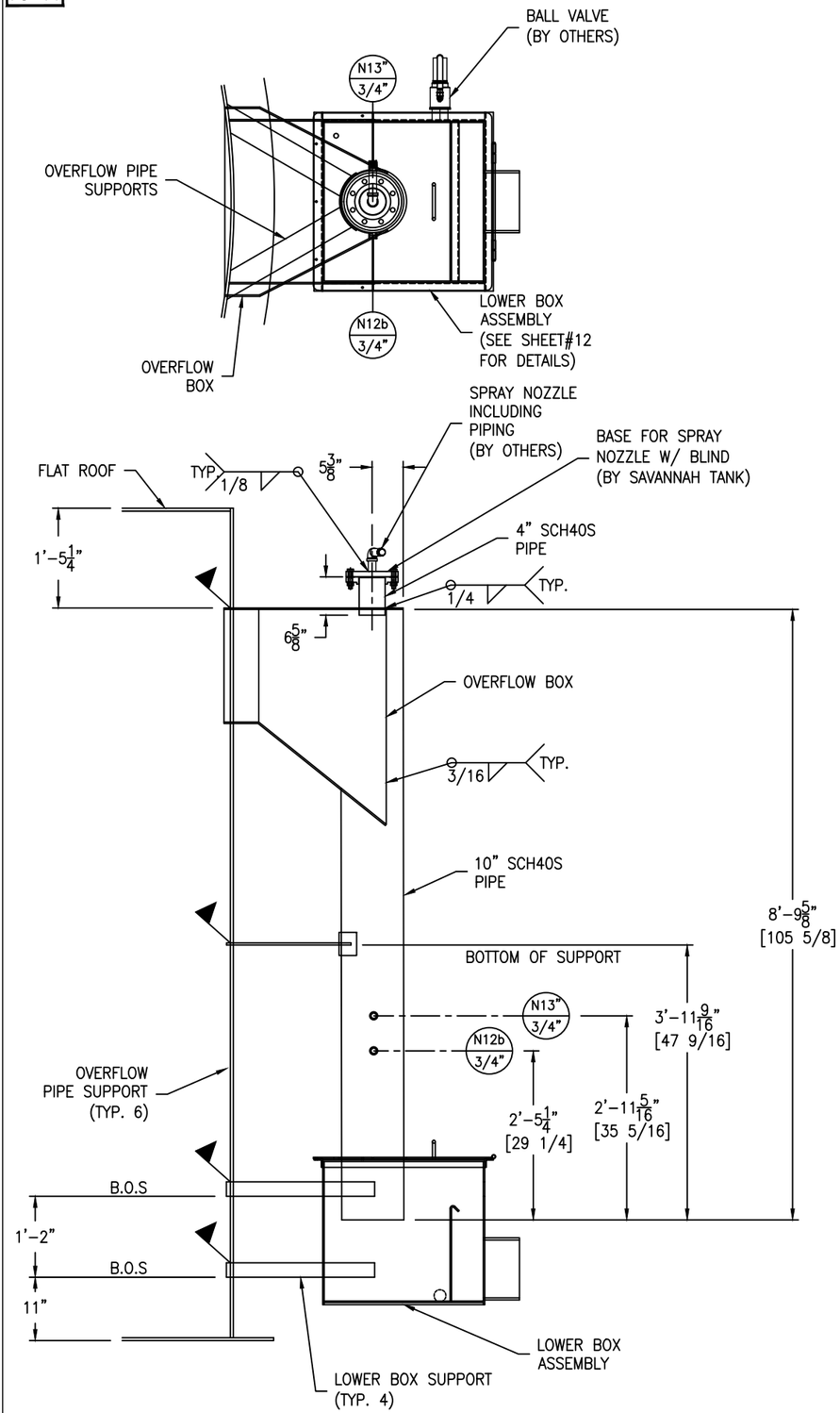

(SS304/L) OVERFLOW ASSEMBLY DETAIL

SCALE: 3/4" = 1'-0"

FC-14

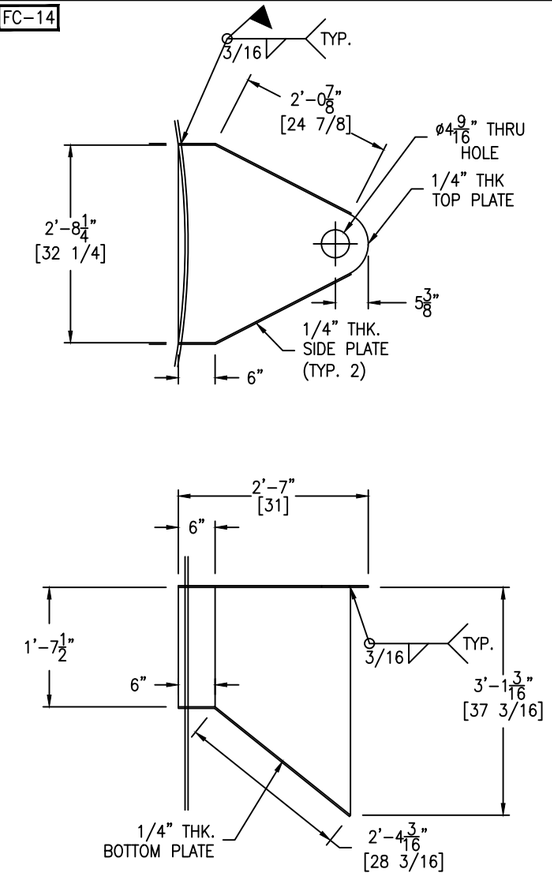

OVERFLOW BOX DETAIL

SCALE: 3/4" = 1'-0"

FC-14

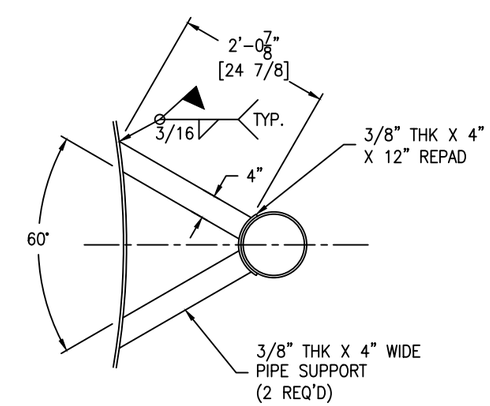

OVERFLOW BOX DETAIL

SCALE: 3/4" = 1'-0"

**FLANGE NOT SHOWN FOR CLARITY.

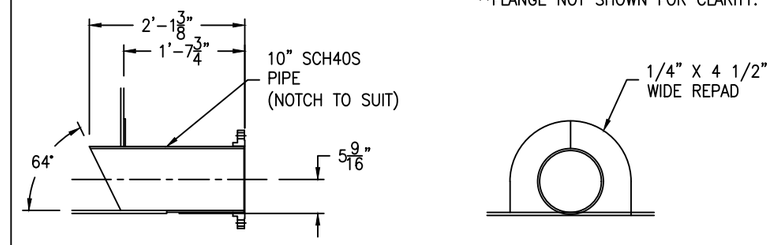

N5a & N5b DETAIL

(2 REQ'D) SCALE: 3/4" = 1'-0"

GT-FC-79

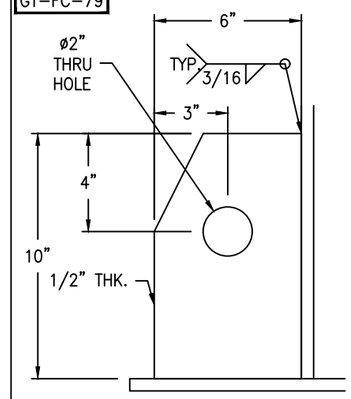

ANCHOR GUSSET DETAIL

(14 REQ'D) SCALE: 3" = 1'-0"

BOLTING FOR BLIND:
(8) BOLT, 5/8" - 11 NC X 3" HH (SS304)
(8) NUT, 5/8" - 11 NC HH (SS304)
(1) RING GASKET, 1/8" THK. X 4" 150# (PTFE)

REV	D.BY	C.BY	DATE	DESCRIPTION
2				AS BUILT
1				CERTIFIED
0	RS	AD	9/15/25	APPROVAL

1 REVISIONS

Savannah Tank & Equipment Corp.
1517 Telfair Road, Savannah, GA 31415
(912) 233-8902

DRAWN BY: RS
CHK'D BY: AD
APPROVED BY: NP
SCALE: 1/4" = 1'-0"

VALMET
DISSOLVING TANK
EQUIP. #
CUST. PO #S30019941

DRAWING NO.: 089-25-11 SHT 11 OF 13 | REV. SET 0

GT-FC-81
FC-14

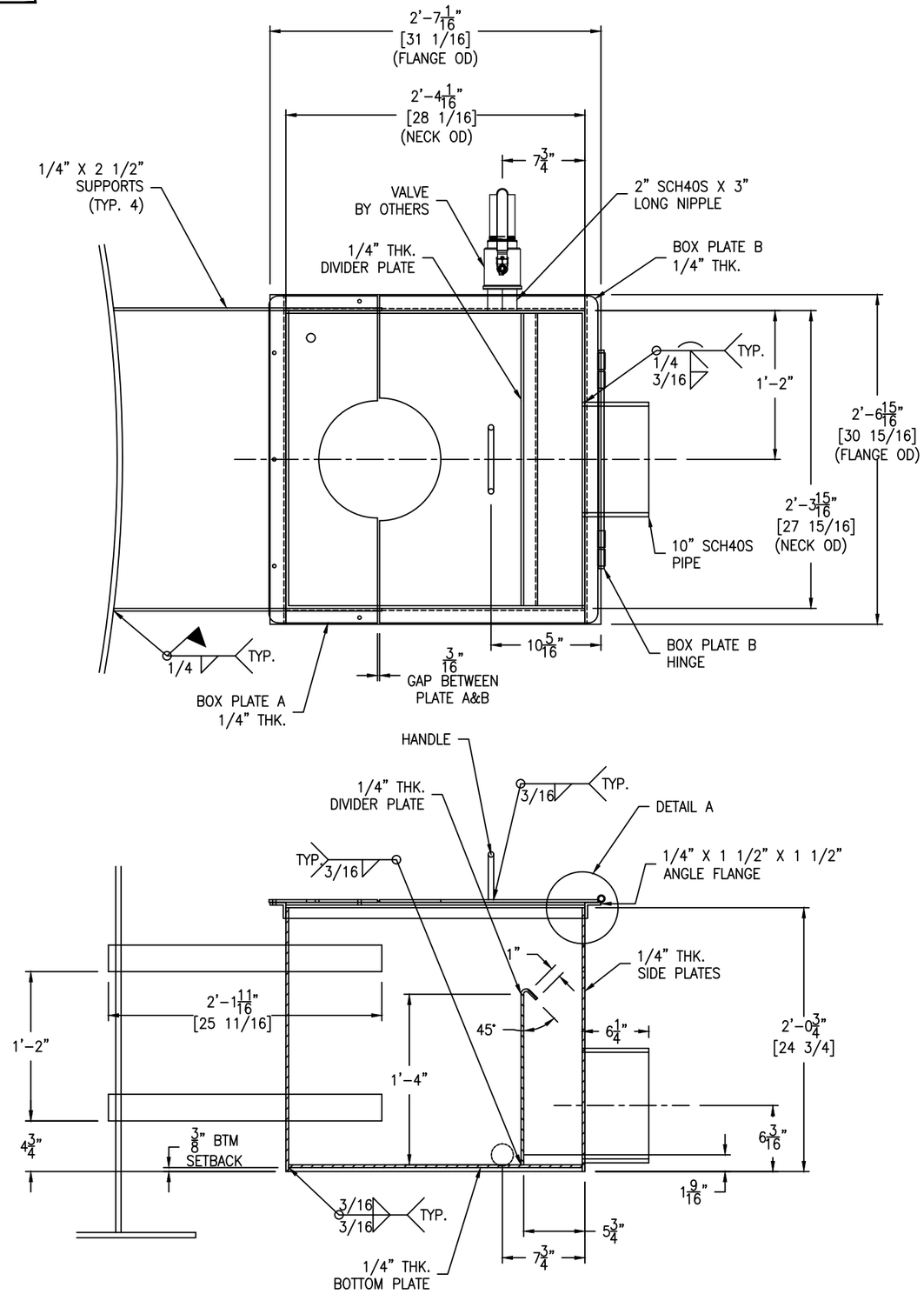

(SS304/L)OVERFLOW LOWER BOX DETAIL

SCALE: 1 1/2" = 1'-0"

FC-14

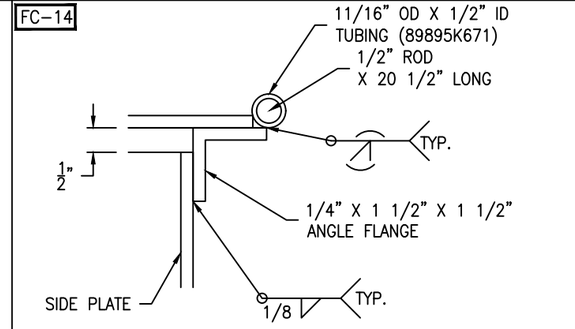

FLANGE DETAIL

SCALE: 6" = 1'-0"

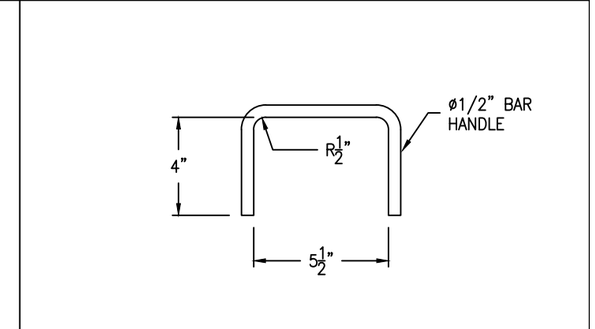

HANDLE DETAIL

SCALE: 3" = 1'-0"

FC-14

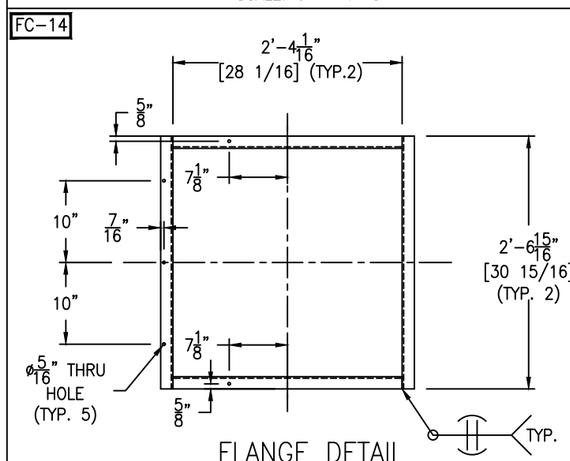

FLANGE DETAIL

SCALE: 3" = 1'-0"

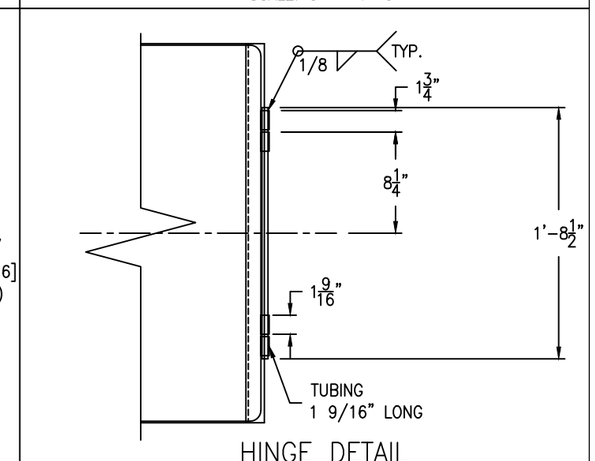

HINGE DETAIL

SCALE: 1 1/2" = 1'-0"

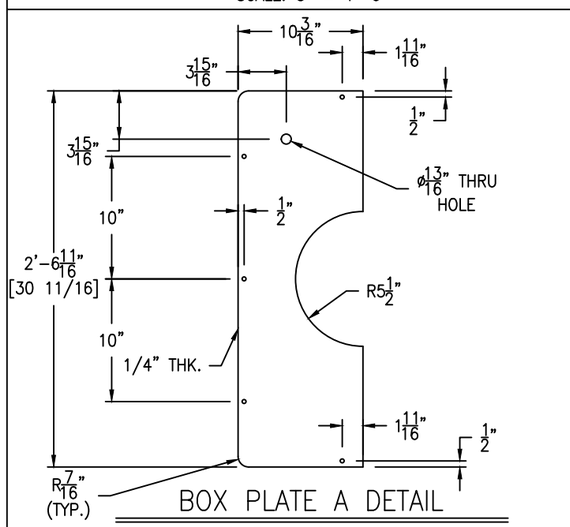

BOX PLATE A DETAIL

SCALE: 1 1/2" = 1'-0"

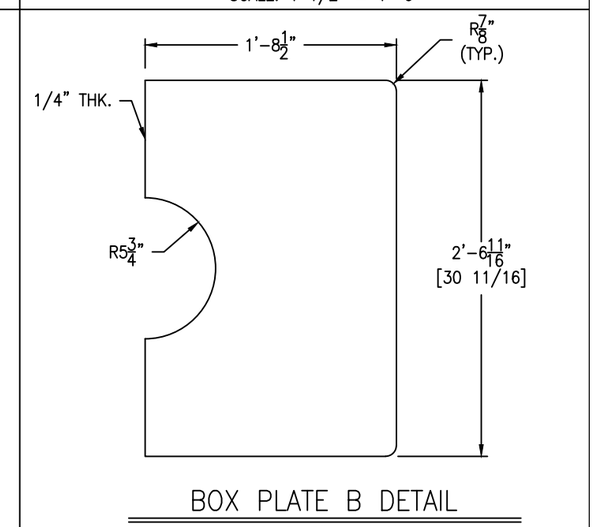

BOX PLATE B DETAIL

SCALE: 3" = 1'-0"

BOLTING:
(5) BOLT, 1/4" - 20 NC X 1 1/4" HH (SS304)
(5) NUT, 1/4" - 20 NC HH (SS304)

REV	D.BY	C.BY	DATE	DESCRIPTION
2				AS BUILT
1				CERTIFIED
0	RS	AD	9/15/25	APPROVAL

REVISIONS

Savannah Tank & Equipment Corp.
1517 Telfair Road, Savannah, GA 31415
(912) 233-8902

DRAWN BY: RS
CHK'D BY: AD
APPROVED BY: NP
SCALE: 1/4" = 1'-0"

VALMET
DISSOLVING TANK
EQUIP. #
CUST. PO #S30019941

DRAWING NO.: 089-25-12 SHT 12 OF 13 | REV. SET 0

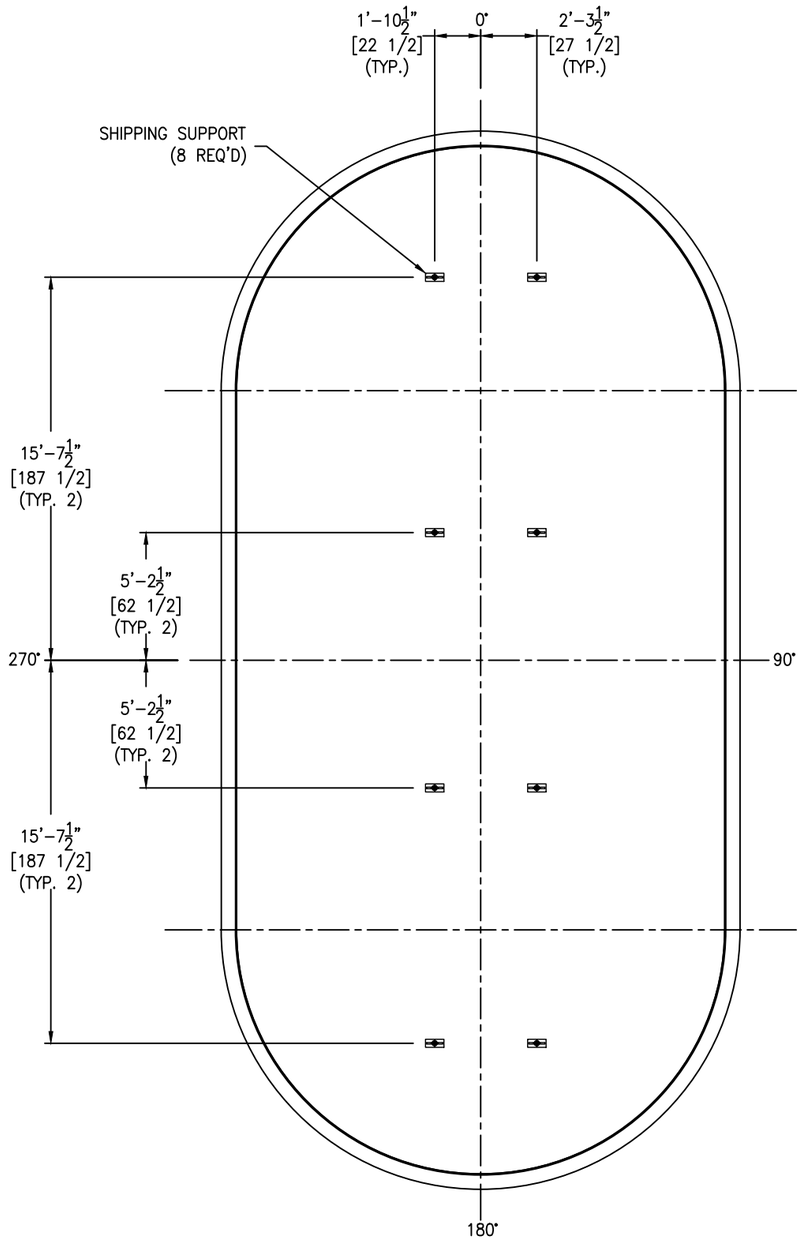

SHIPPING SUPPORT PLAN DETAIL

SCALE: 1/4" = 1'-0"

FC-14 FC-39

GT-FC-81

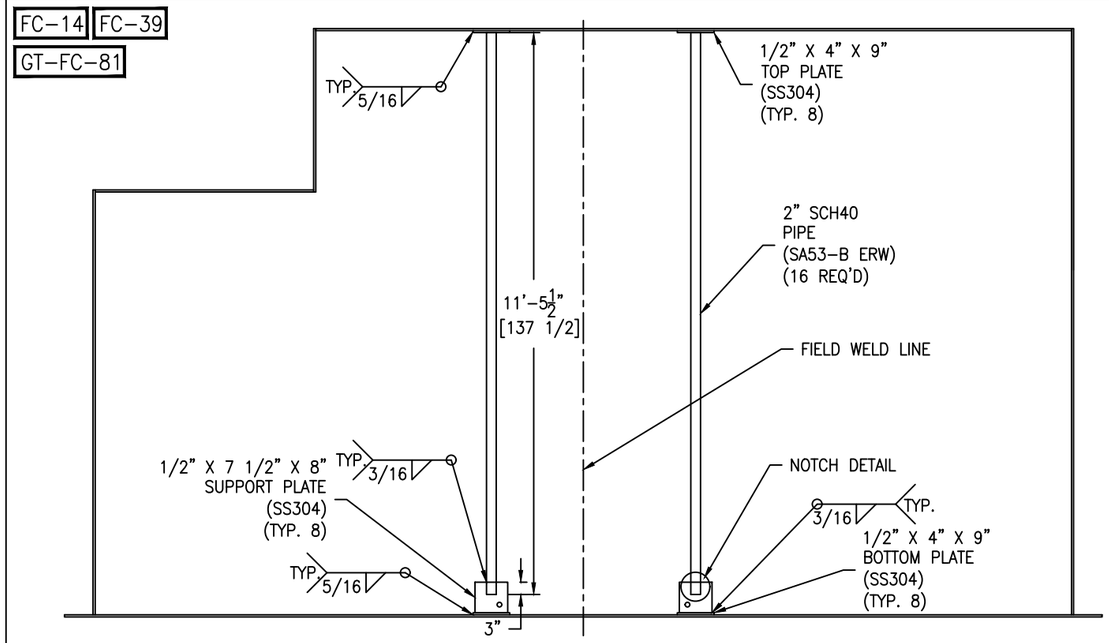

SHIPPING SUPPORT ELEVATION DETAIL

SCALE: 1/2" = 1'-0"

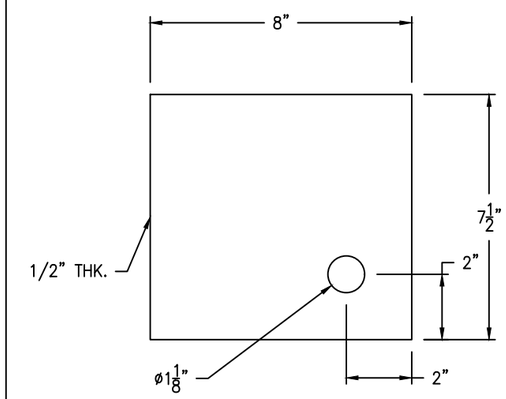

SUPPORT PLATE DETAIL

SCALE: 4" = 1'-0"

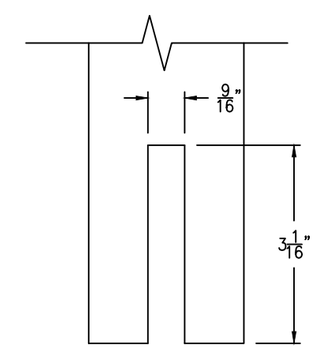

PIPE NOTCH DETAIL

SCALE: 8" = 1'-0"

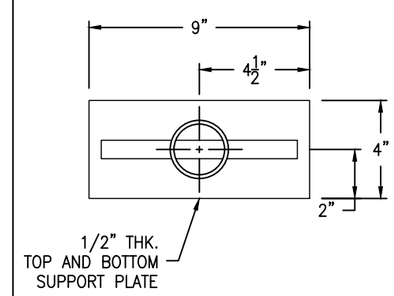

SUPPORT PLAN DETAIL

SCALE: 3" = 1'-0"

REV	D.BY	C.BY	DATE	DESCRIPTION
2				AS BUILT
1				CERTIFIED
0	RS	AD	9/15/25	APPROVAL

⚠ REVISIONS

Savannah Tank & Equipment Corp.
1517 Telfair Road, Savannah, GA 31415
(912) 233-8902

DRAWN BY: RS
CHK'D BY: AD
APPROVED BY: NP
SCALE: 1/4" = 1'-0"

VALMET
DISSOLVING TANK
EQUIP. #
CUST. PO #S30019941

DRAWING NO.:089-25-13 SHT 13 OF 13 | REV. SET 0